The Early

Super-Heterodynes

Circuits

The Vintage Radio Identification SKETCH-BOOKS of D. H. MOORE

VOLUME X

The Editorial Group, Ltd...

P.O. BOX 521 • PALO ALTO, CALIFORNIA

All rights reserved. No part of this work, the text or illustrations, may be reproduced or in any form transmitted in any form or means, electronic or mechanical, including photo-copy.

© D.H.MOORE, 1954/1985

DEDICATION

...to a way of life -
that should not have
been forgotten.

Autographed Edition

It is my sincerest wish that this latest contribution of my vintage radio writings may afford you as much enjoyment and usefulness as I've had in compiling it.

Over to you, and 73,

Palo Alto

Acknowledgements

Bits and pieces of the material contained in these volumes have been published, referenced, or reviewed in divers media over the years, and where a prior copyright existed, my thanks to the publishers for relinquishment, especially foreign publishers. They all seem to have understood and shared in the inherent fraternalism of a labour of love, which is appreciated.

Thanks should also be given Stan Lopes of Concord, California, who patiently gave all original volumes a deft technical-edit of the authenticity of the circuits depicted. His efforts obviously have resulted in more useful books. He even found errors in original sources!

Thanks are also due to Charlie Rhodes of South Salem, New York, for his spotting a few fundamental errors in Volume VIII, which deals with the period of 1910 through 1924 - a period that actually holds little interest for me, but which apparently does for others, and that volume was created for them. Charlie's familiarity with circuitry of the period was a boon to the over-all effort.

Special thanks must go to D.G.Yule of Mountain View, California, who sponsored the original effort as a contribution to the hobby, and to Howard W. Granoff of Silver Spring, Maryland, whose unflagging effots to promote awareness of the Sketch-Books and Monographs has done much towards their current popularity and general acceptance.

And in as much as fraternalism is the basis for any shared special enthusiasm, which is what any hobby is, these Sketch-Books and Monographs in that traditional spirit.

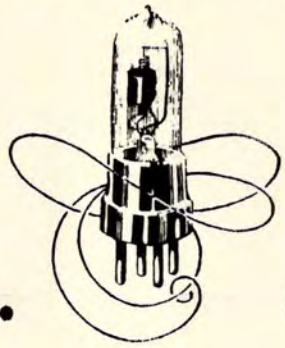

REPRESENTATIVE KITTED SUPER-HETS OF THE TWENTIES

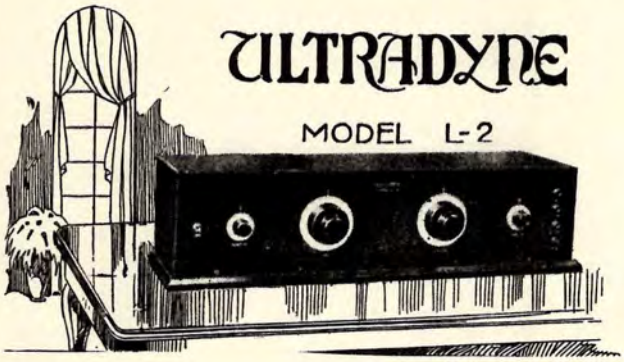

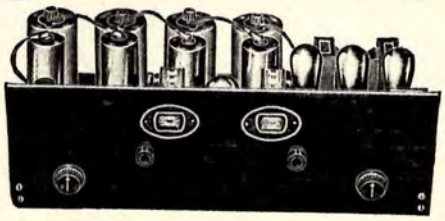

The Braxton-King Shield Grid Eight,

MAGNAFORMER 9-8

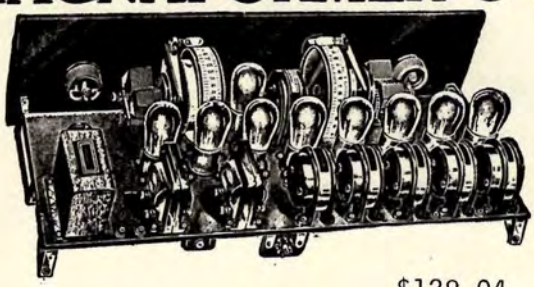

$128.94

ROBERTSON-DAVIS

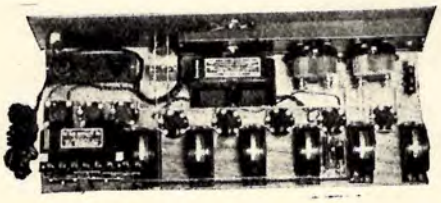

Victoreen

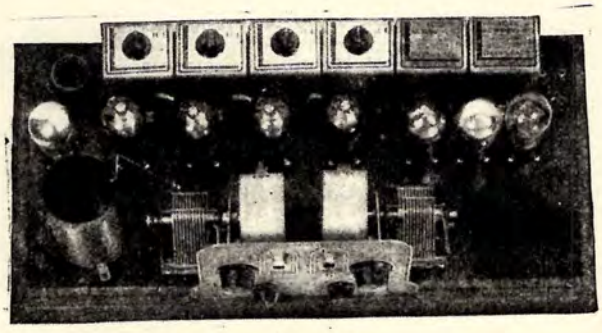

LINCOLN $92.65

REPRESENTATIVE KITTED SUPER-HETS OF THE TWENTIES

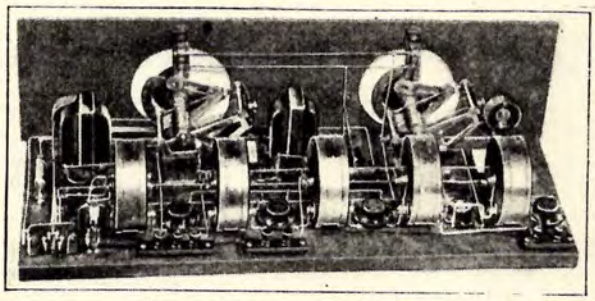

IMPROVED MADISON-MOORE "ONE-SPOT" RECEIVER

$121.75

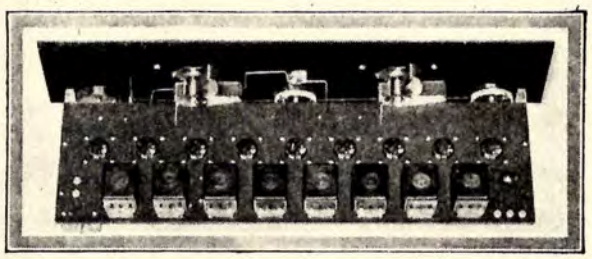

IMPROVED NINE-IN-LINE SUPER

$110.85

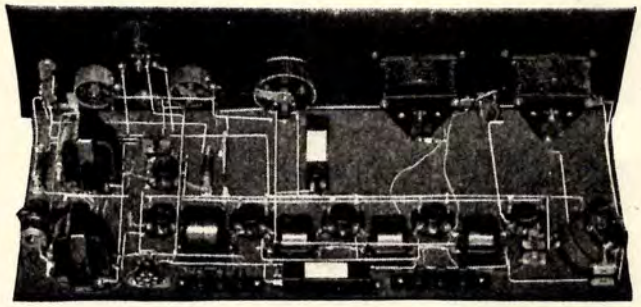

30 K. C. SUPERHETERODYNE

$92.85

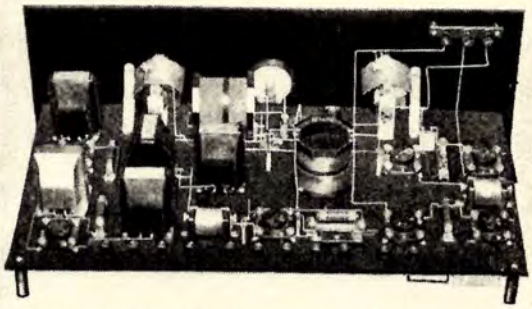

IMPEDANCE COUPLED SUPERHETERODYNE RECEIVER

$134.20

CAMFIELD SUPER 9

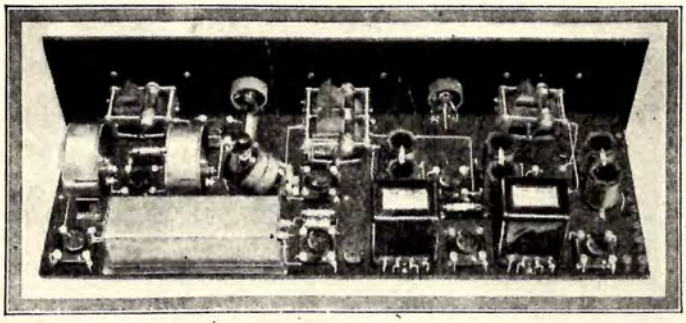

$93.50

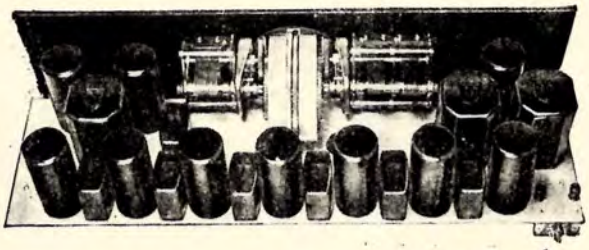

Tyrman Ten $110

Contents

Frontispiece
Preface

Introduction..... 1

Abbot Shielded Super-Het..... 6
Armstrong Shielded Super..... 9

Baldwin Pacific Supers..... 12
Model "A"..... 14
Model "C"..... 16
Model "D"..... 17
Model "A" Loop Details..... 18
Best & The Super-Het..... 19
Midget Super..... 20
45KC Super-Het..... 22
45KC Variant..... 26
115KC Super..... 28
Braxton-King Model "A"..... 32
Power Supply..... 34
Bremer-Tully Super-Het..... 35
Bryant "Magister" Super..... 36

Carborundum 150KC Super..... 38
Clark "Super-Octette"..... 41
Cockaday Super-Het Reflex.... 44
Citizen's Original Super 8... 47
Citizen's 45KC Super..... 49
Camfield Super-Nine..... 52
"Super-Selective 6-10"..... 54
Celco "D"-Coil Super..... 57
Callies Super-Het..... 60
Clough 54KC Super-Het..... 62

"Eight-In-Line" Super..... 65
Special 9 Power Supply..... 68

Fenway's First Super-Het..... 69
Forbes Super..... 75
Fitch "Tropodynes"..... 77
Fifty KC Trap-Circuit..... 82

General Radio 30KC Super..... 84

Haynes Super-Het, 1924..... 86
"DeLuxe" Super..... 89
Simplified Super-Het 1923. 94
"Hetro Five" Super..... 96

Klentz 30 KC Super-Het..... 97
100KC Super..... 98

LaPeer AR-9 Super-Het..... 101
Lincoln 8-80..... 104
Super Eight..... 106
Super Nine..... 108
DeLuxe 10..... 109
10-B Power Unit..... 112

Magnaformer Super-Hets..... 113
8-9 Super-Het..... 115
AC 8-9 Super..... 116
8-9 Variant..... 117
8-9 Variant #2..... 118
AC 29 Super-Het..... 121
Model 55-A Power Supply... 123
Melo-Heald "Hot-Spot Eleven" 124
"Hot-Spot Fourteen"..... 127
Mercury Super 10..... 129
Moskowitz & Herbach Type B.. 137
Madison-Moore Super-Hets.... 138
Super-Het 1926..... 139
International One-Spot.... 141
International One-Spot AC. 142
Modified "One-Spot" 1927.. 145
International Power Supply 147

Naken "Ultra 5" Regen. Super 148
Note On Band-Pass Filters... 150

Pressley Super-Het..... 152
Precise "Automatic Control". 155

Remler 29 Shield-Grid Super. 158
Modifications..... 163
Power Compact..... 164
First Version..... 166
Second Version..... 167
Third Version..... 168
Final Version..... 169
Rauland 30KC Super-Het..... 170
"Super Fine" Super-Het.... 172
Raven Super-Het, 1925..... 175

Receptrad-Greiff Super 1924.. 177
Ryan DX-Seven..... 180
Radio Digest's Super-Het..... 183
Remler 45KC Super-Het..... 186
With P-P Audio..... 187
With Impedance-Coupling.... 188
Loop Connexions..... 189
Operating Instructions..... 190
An Improved Version..... 191
Robertson-Davis Super-Six.... 194
Automatic Six..... 196

Samson Impedance-Cpld. IF.... 198
Scott AC-10 Super..... 201
Automobile Super-Het..... 204
St. James "Twin Four"..... 205
"Upright Eight"..... 209
Two-Forty Super..... 210
Silver-Marshall AC Super..... 212
Standard 7-Tube Super-Het.... 213

Thompson "Super Seven"..... 214
Tyrman "Imperial 80"..... 217
Victoreen "Universal"..... 220
Victoreen "Universal"..... 220

"Ultradyne L-2" (Lacault).... 223
Variant..... 227
"Strobodyne" (Lacault)..... 228
"Strobodyne Junior"..... 231

22KC S.W. Super-Het, 1927.... 234
An Early Oscillator Concept.. 236

* * *
* *
*

Preface

Of all the sometimes dubious socio-technical benefits for the average citizen, arising from the Industrial Revolution, none permeated the lives of everyman so insidiously and so indestructably as Radio. This takes full cognizance of the telephone and telegraph, the steam-engine, the motor-car and the aeroplane. While all affected to some degree the social morés of everyman, none were capable of altering irreversibly the social structures of day-to-day living, as Radio, and a few decades on, its idiot hand-maiden known as Television.

After long wave broadcasting began from KDKA, a decade of very frenetic activity ensued that eventually saw the establishment of the super-heterodyne broadcast receiver as the most taken-for-granted implimentia of everyman's life, which also destroyed the wonder and the magic of early Radio. Happily, but not for all time, as today we have regional vintage Radio hobby groups who are valiently trying to recapture something of the wonder and the magic. This Monograph is a contribution to that endeavour, by detailing the rise of the super-het through the most fruitful years, the Twenties.

While the growth of interest in the super-het may best be described as phenomenal, its ultimate standardisation came about simply as a most advantageous economic feasibility for corporate interests. Such interests naturally destroyed the the wonder of Radio, the experimenter, the custom-set builder, and the home-constructor, all of whom were the standard bearers, as it were, of the romance of Radio.

In 1919 the super-hets were 12-tube affairs, mounted on a five-foot board, usually pine. There were no panels, and parts were connected together with common bell-wire. The tuning usually required the combined labours of five stalwart men, and half an hour was required to bring the set into resonance.

Each stage of the IF consisted of a pair of honeycomb-coils, and two variable condensers - one across each coil. Each stage required a seperate "B" battery, and three "A" batteries. As the only tubes that were available were made for the U.S.Navy, the normal current consumption was on the order of 2.5A. And after bring the circuit to the point of resonance, all that could be picked-up were CW signals and sometimes maritime transmissions, occasionally a transatlantic station.

The early super-hets were prone to howl like banshees, each

stage contributing a frequency of its own. Distortion was terrific, and the receiver would not remain at resonance. It would suddenly de-tune on its own and go into sustained oscillation. While the volume was ear-splitting, tone control was quite unknown.

Probably the most remarkable thing about the rise of the super-het was the persistence with which it was pursued by our early pioneers. In the following pages you will find its evolution rather clearly drawn-out, and while you will encounter a few freakish and weird design concepts, you should remember that they all, in one way or another, contributed to the Radio we take so for granted today, sans romance and wonder and magic.

It would be physically impossible to detail all of the hundreds of early super-hets from the Twenties, both here and from abroad; but you will find sets that were quite representative of the better designs, and the way Radio engineers were thinking at the time. It might also be mentioned in passing that despite transistors and solid-state devices, with vest-pocket size receivers, the basis of the super-het circuitry has not altered since 1919.

Once corporate interests secured control of Radio here, after 1931, there was no real progress that could be deemed a true advance in the state-of-the-art. During the Thirties, what advances were made, were made almost exclusively in the field of communication-receivers, and in this, the ham operator played a major role.

Introduction

Fundamentally, the basis for the super-heterodyne circuit has not been altered since 1918. What refinements occurred during the decade of the Twenties were natural extensions of that fundamental basis, as the state-of-the-art, chiefly in more relaiable components and an advance in knowledge, rushed forward. When its economic feasibility was established, by the late Twenties, the Octupus moved once again to dominate the market, and succeeded - so much so that by 1933 the basic super-het circuit had become standardised to the point of banality.

The early endeavours of the Allies and the Germans during the Kaiser's War paralleled each other to an amazing degree, the latter awareness coming only after the end of the war; but it should always be remembered that when the Government confiscated the wealth of German radio patents, it made possible the subsequent monopolistic tendency of the Octupus. In fact, the rise of RCA could not have been possible without the German patents.

It is also a fact that some, not many, of the latter-day TRFs and super-regenerative receivers could out-perform many a super-het in terms of sensitivity and selectivity. The modern sophistication of adjunctive functions such as digital frequency read-outs, noise silencers, frequency notches, side-band depth, so-called hi-fi audio output - all have nothing to do with enhancing the performance of the modern super-het, but are merely a testament to the organised laziness of of the current generation.

The rise of Radio was a distinct social phenomenon that has influenced everyman and his world, culminating in Radio's idiot handmaiden - TV. But the beginnings of anything of such magnitude will always take on a certain wonder and a curiosity. This Monograph seeks to allay the curiosity and emphasise the wonder. The Twenties were the glory days of Radio, when advances in the art tumbled over each other in untold numbers year after year. The super-het came of age towards the end of that decade, and the aura of wonder and magic began to fade before the standardised assembly-line productions of corporate manufacturers.

Most of the early super-hets were offered as kits, either the raw components or semi-factory assembled units. Like Sears-Roebuck

shoes, they lent themselves to being readily classified as being good-better-best. The circuits to be found in the following pages were all legitimate, and include some radical or novel deviation from the basic super-het circuit of the period, such as Lacault's modulation concept and Samson's peculiar impedance-coupled IF circuit.

You will find that most are quite easy to construct, and you really should have a go. After all, the real fun of Radio remains in the act of doing it yourself. While all designers specified certain makes for components, comparable components by most any manufacturer could be substituted without any deliterious effect whatsoever. There were, of course, a few components that were mandatory, and should be sought at swap-meets or junk-shops.

It should be mentioned that some of the very early super-hets, especially those working at 30KC and 45KC, did radiate, and will interfere with your idiot-tube, unless the set is properly shielded. This may be minimised, or at least controlled to some extent, by the use of a 3-point loop - which most of the better super-hets called for, anyway. If you have a Bodine DeLuxe loop at hand, you have the best that was made in the Twenties.

There is a vast library anent the super-het and in consequence, details of how and why a super-het works are not given here. However, if you have any questions about any of the circuits detailed herein, don't hesitate to ask: we can probably help. Conversely, as every super-het of the Twenties is not detailed here, only the more interesting ones, if you have an interest in one not listed, write; our files are rather voluminous and we may just have that circuit; and such information is free.

There is one book on the super-het, however, that might be mentioned, as being a straight-forward, no-nonsense exposition of the concept, in mostly non-technical language: Robet E. Lacault's SUPER HETERODYNE: Construction & Operation; Radio Electric Labs, N.Y.C., 1926. (RREL was the last company set-up by Lacault, and the name was built around his initials.)

* * *

The first super-het kit was offered by A.J.Haynes in 1923. It was essentially the original Armstrong circuit, with an improvement in the IF coils, which Haynes had designed with Griffith. He offered two versions, one called a "simplified" super-het. Both will be found detailed in the following pages.

You will quickly note that the majority of early super-het circuits were amazingly similar, especially those that called for IF coils

made by Remler, which were probably the best. The oscillator coil most often specified was that made by Remler, Camfield, Thor or Silver-Marshall. All carried the same part number - #620, which is interesting, in that the companies were not related. They may have, however, all been working under a basic patent or license held by someone else. In passing, it should be mentioned that such oscillator coils, and including the one made by Bremer-Tully of the same period, worked quite well and predictably.

The issue of shielding was a controversy up to the end of the decade, and actually was never resolved. For some manufacturers, it was a selling gimmick; for others, it was a serious matter. That shielding had merit is attested to by the standardisation of shielding on all radios of the Thirties and later. Alcoa and Hammarlund made the best shield cans. They were easily assembled and were of a gauge heavy enough to made a difference. The seperation between the shields and a coil or variable condenser was apparently highly critical. Canned coils made their appearance in 1923, but did not win instant favour, as the wood baseboards of the time negated some of their effectiveness.

* * *

You will note, as you go through this treatise, that 1927 seems to have been the high-water mark for the super-het, as far as offerings to the home-constructor were concerned. While the expression extolling the super-het as the "Rolls-Royce" of radio circuits, the expression was first used in 1924 by a mail-order house in Chicago, and its seems that even as now, more home-constructors were driving Fords than Rolls-Royces. You will also note that some of the prices asked for kitted radios, with the dollar on the gold standard, were a bit out of reach of the average set-builder.

You will also note the definite move away from the rat's-nest type of wiring towards a more aesthetically satisfying layout, with the introduction of sub-panel sockets and ivory-coloured Formica base-boards. Mahoganised front panels, machine-turned metal panels, lavishly decorated panels showing birds in flight or nature-scenes, all made their appearance during the mid-Twenties, but none of them really had the instant visual appeal of the lovely Lignole composition panels. If you ever find one in pristine condition, grab it, and use it to enhance the appearance of your home-construction.

You may also note that only selected versions of some marques are detailed herein. If you have a version not shown, simply write and the information will be forthcoming, for free, gratis, no charge.

* * *

While Armstrong deserves full marks for publicising the super-het, he was not, contrary to a popular myth, the "father" of the circuit.

In 1914 Fessender, seeking to improve the arc-type telegraphic stations of the time, developed a miniature arc to fit into a receiver cabinet, and that would generate a high frequency oscillation. He called this combination a new "heterodyne receiver".

His form of reception was superior to the "tikker" form, but not as reliable, as the operator had difficulty in keeping the arc going. This was, however, the first form of the super-het circuit, wherein an "oscillating circuit" (or what our early media writers referred to as a "heterodyne circuit", and some early panels actually had a dial marked "Heterodyne") superimposed another wave on the incoming signal, and the resultant frequency was the one that produced an audible signal.

The commercial introduction of the heterodyne circuit occurred in 1914, was interrupted by the Kaiser's War, and with the increasing availablity of the three-element valve, development moved ahead. Until then, crystals of all manner of materials and metals had been used as amplifiers - the great bug-bear of early receivers. Crystals had been tried in series, in parallel, in front of and behind the first stage, on the roof, and everywhere else. Chemicals were also tried, usually with disasterous results, and magnets were tried, but none proved to be commercially feasible, despite the pufferism of early crystal producers' adverts.

The triode permitted audio amplification, RF amplification, and the full-scale application of the heterodyne principle to assist amplification. There was a side-effect, though, and that was what were called tube microphonics. As every tube had internal noises, those noises were also amplified by the triode. To get around this, manufacturers of RF transformers designed their products to cover all wave-lengths from 200 to 660 meters. This meant a sacrifice in efficiency, until the rise of the "Custom Set Builder", who demanded a better product and could afford to pay for it.

In time, competition as well as advances in the state-of-the-art resulted in more or less consistently good units, that could go beyond the B.C. band. By the late Twenties, it was difficult to find a really poor transformer, although, as

like Sears-Roebuck shoes, some were good, some were better, a few were best.

The heterodyne principle allowed for the manufacturing of transformers for a particular frequency, thereby securing maximum efficiency. But there was never an agreement as to what constituted the ideal Intermediate Frequency. (There still isn't, merely a corporate standardisation because it is economically the most profitable.)

In the following pages you will find a series of super-het circuits in which the IF was peaked at 30KC, 45KC, 54KC, 50KC, 75KC, 90KC, 95KC, 100KC, 110KC, 115KC, 175KC, etc. They all worked, in their fashion, and if you are moved to construct any of these circuits, you will be quite satisfied, I feel, with the results - as long as you place the circuit within the context of its time and place. Good luck.

* * *

While representative receivers of certain marques are covered in this Monograph, the complete history of such marques has been put into seperate Monographs, which may be ordered from the publishers. Those marques would include:

Bremer-Tully	Silver-Marshall
Remler	Sargent-Rayment
Victoreen	Pilot
Ultradyne (Lacault)	Scott

* * *
* *
*

ABBOT's SHIELDED SUPER-HET, 1923; Sht.1

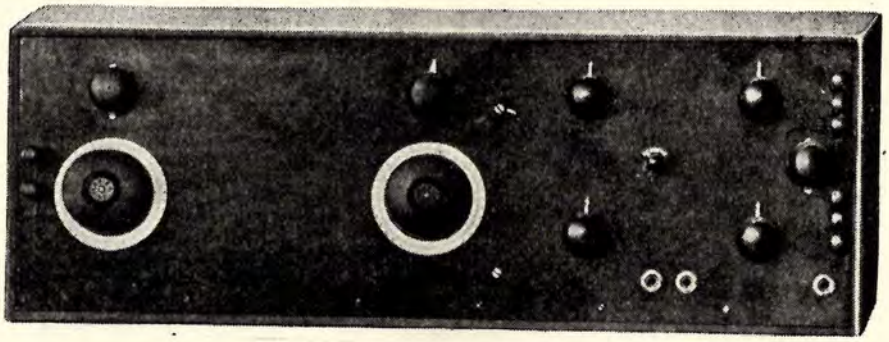

Experiments in shielding began long before the "Big War", and some rather weird configurations resulted. The effects of shielding were not well understood, and it required a few years before true data were established, chiefly by what we now know as the National Bureau of Standards.

The super-het shown over-leaf is, perhaps, a gross example of "over-kill". The interior of the cabinet - walls, sides, top and bottom - were shielded!-in single panels that were screwed together. Shield-leakage was later knowledge. The individual RF stages were also shielded within the other shielding, and reminding one of the subsequent compartmentisation of individual stages best exemplified, perhaps, in the Sargent-Rayment Seven.

The employment of variable grid-leaks was innovative for the time (1923), and you will note that an odd ohmage of 400 was specified. A couple years later the British invaded with the "Bretwood" variable grid-leak, which was a superior piece of hardware.

All components, as the designer, Harry Abbott stressed, were off-the-shelf, values were not critical, save the 1,000 turn winding of the input filter. This permitted "Signal Clarification", a kind of primitive inductance-type wave-trap feature, as one coil could be moved closer to the other with a lead-pencil. The AF transformer ratio was also odd, being 2.7:1. Any type of coil with 1,000 turns could have been used, such as solenoid, basket-weave, honeycomb, curkoidal, criss-crossed, etc. Of academic and historical interest.....

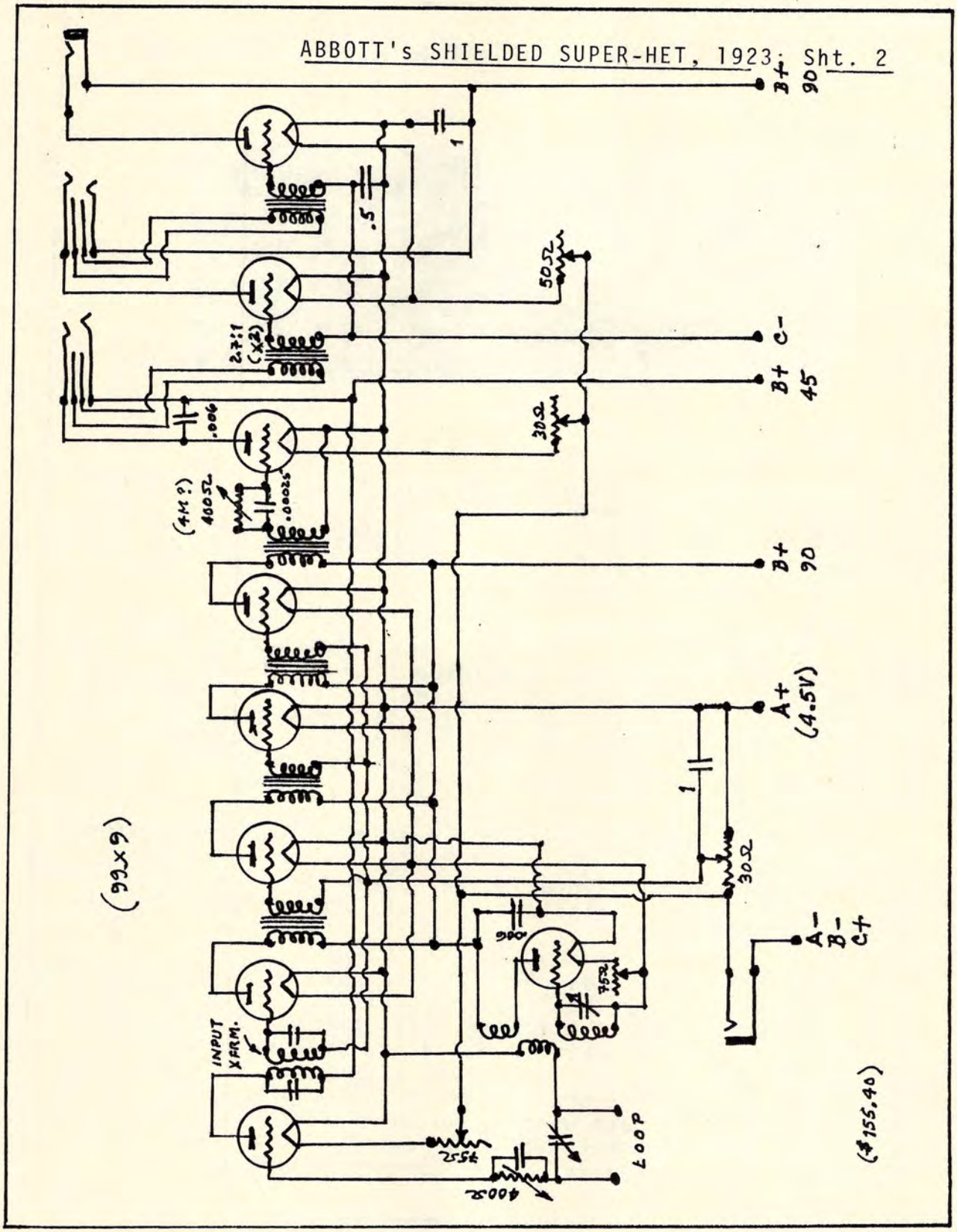
ABBOTT's SHIELDED SUPER-HET, 1923; Sht. 2
B+ 90
1
.5
50Ω
2.7:1 (x2)
C-
B+ 45
.006
30Ω
(4H?) 400Ω
.00025
B+ 90
A+ (4.5V)
1
30Ω
(99x9)
900
750Ω
A- B- C+
INPUT XFRM.
255Ω
400Ω
LOOP
(#155,40)

ABBOTT's SHIELDED SUPER-HET, 1923; Sht. 3

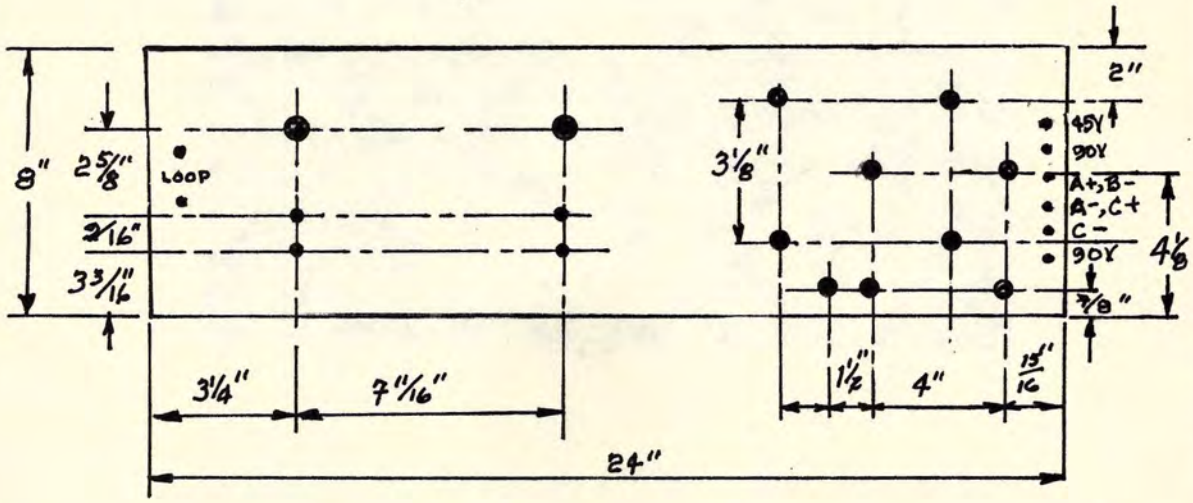

PANEL DRILL PATTERN

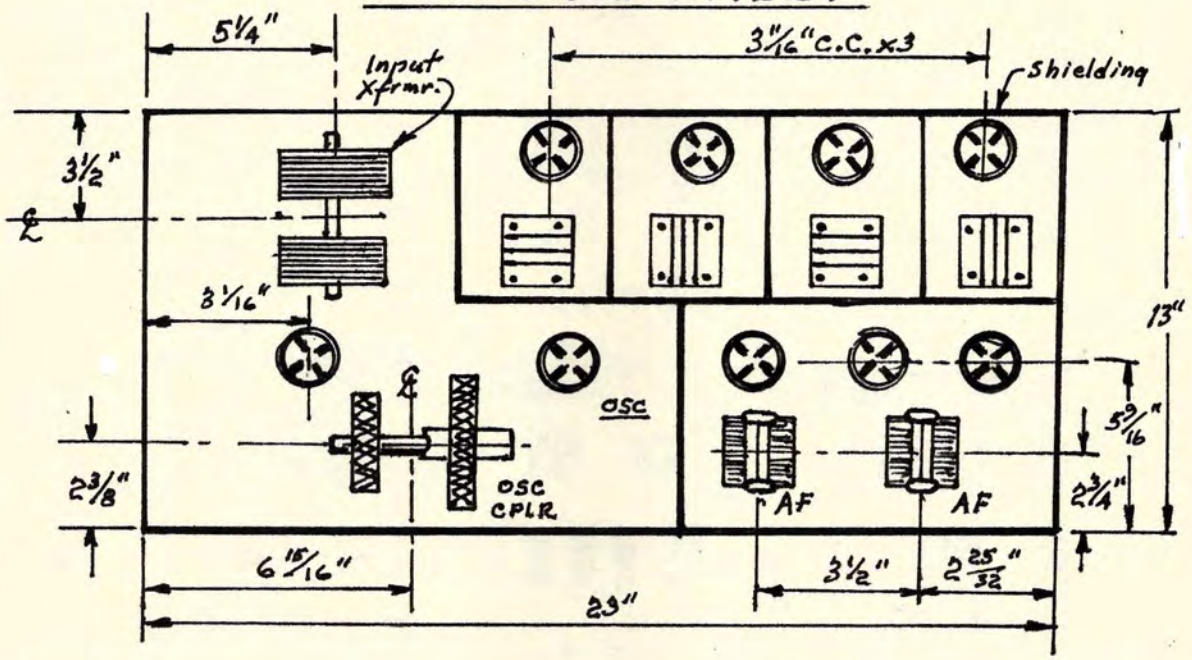

(#155)

BASEBOARD LAYOUT

ARMSTRONG SHIELDED SUPER-HET, 1926;Sht.1

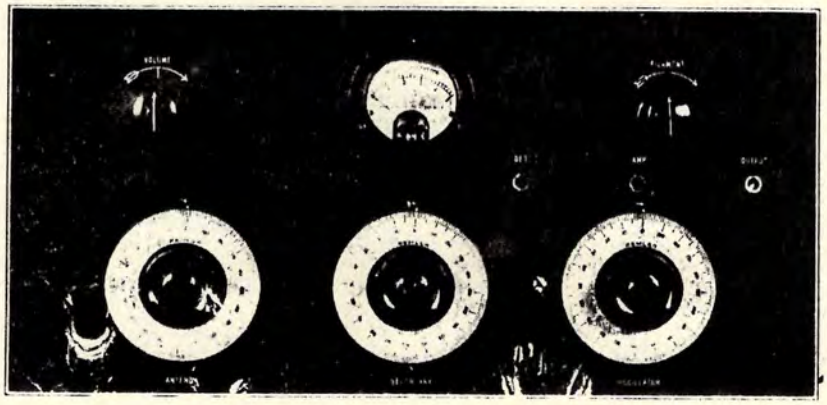

Despite Armstrong's early fame because of his association with the development of the super-het, he did not become involved with the designing and manufacturing of such sets. After the Kaiser's War he continued his experiments, under the aegis of The Octupus, and took part in the never-ending litigations anent the regenerative circuit, which he lost to DeForest eventually, and in general became more and more taciturn and withdrawn. His contributions to RCA were numerous, some major, some minor, but his brief flirtation with fame did not last out the decade that saw it born. He lived modestly and, more or less quietly, on Long Island.

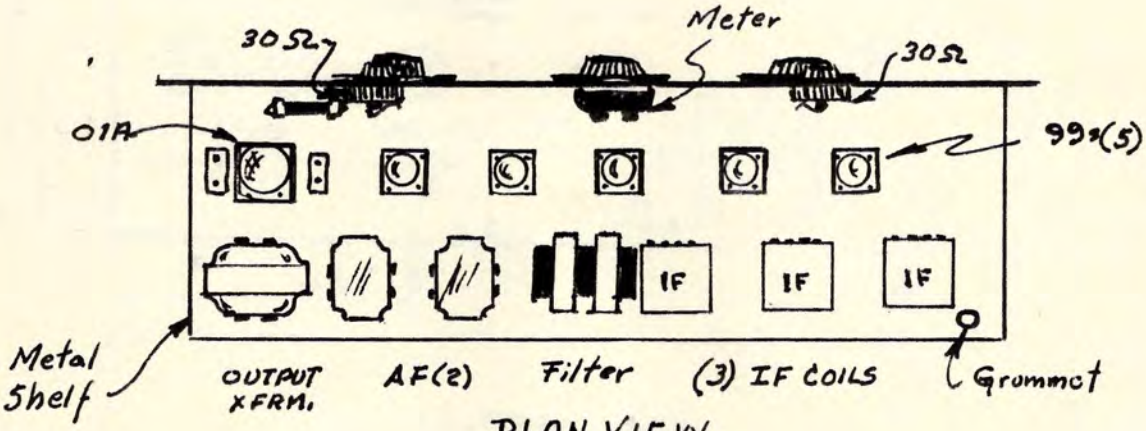

PLAN VIEW

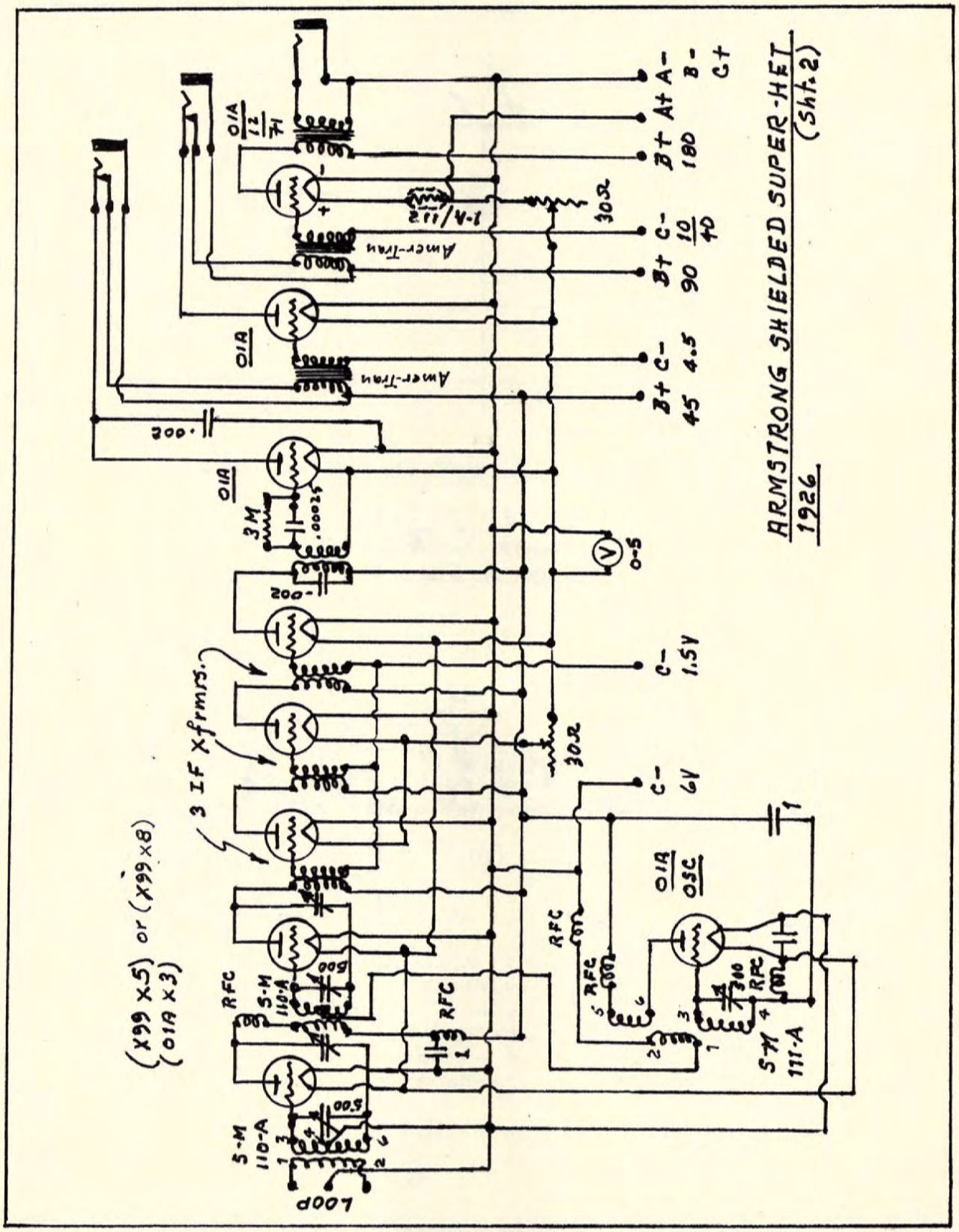
ARMSTRONG SHIELDED SUPER-HET
1926
(Sht. 2)
(X99 X5) or (X99 X8)
(01A X3)
3 IF Xfrmrs.
01A
12/71
Amer-Tran
1-A/112
30Ω
B+ A+ A-
180
B-
C+
B+ C-
10/40
90
B+ C-
4.5
45
.002
3M
.00025
.002
0-5
C-
1.5V
C-
6V
RFC
5-M
110-A
500
LOOP
01A
OSC
300
5M
111-A

ARMSTRONG SHIELDED SUPER-HET, 1926;Sht. 3

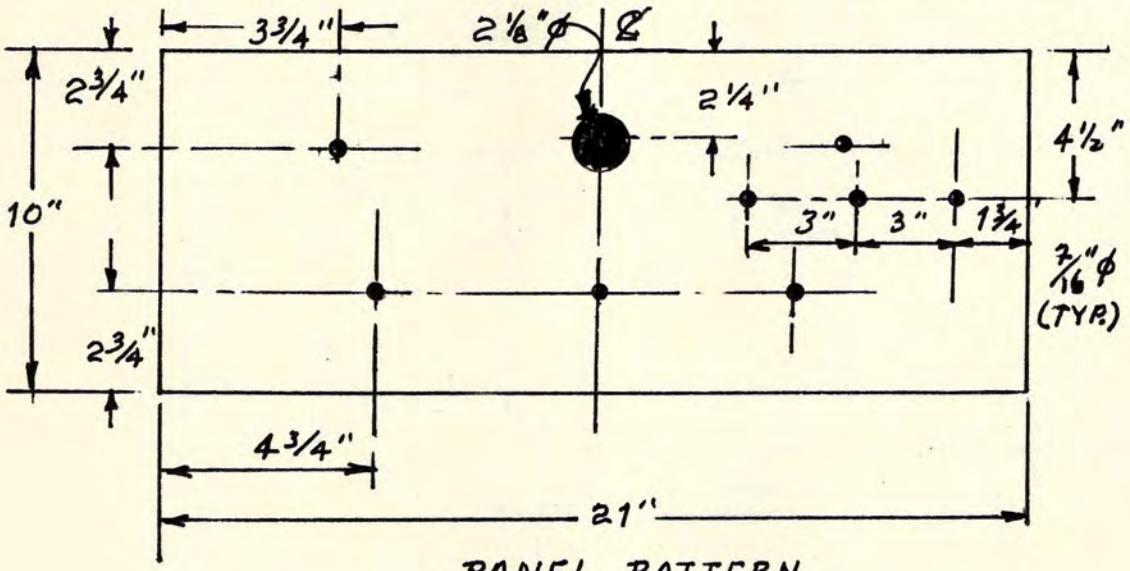

PANEL PATTERN
Symmetrical About ℄
Except As Shown.

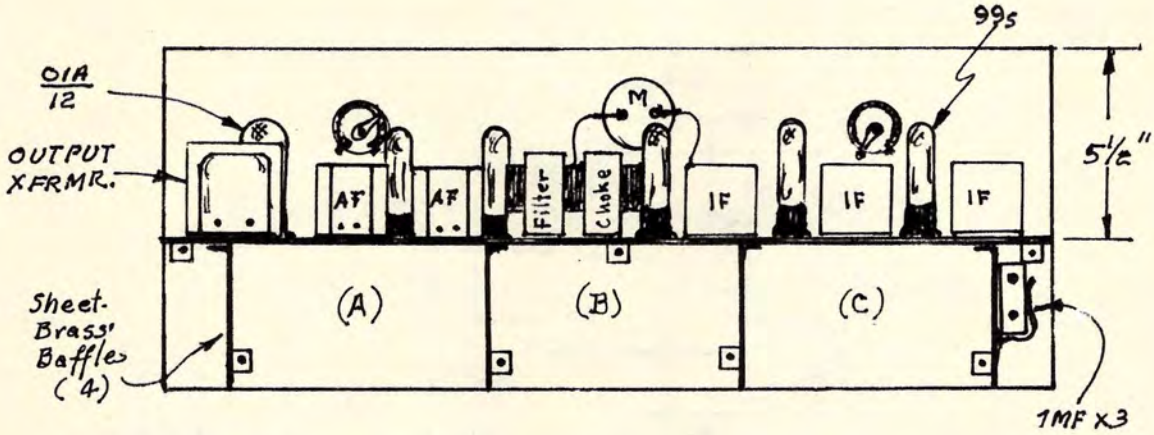

(A)	(B)	(C)
Variable.	Variable.	OSC Coil.
AF Coils.	Freq. Changer.	RFC (3).
Tubes (2).	B+ Choke.	Variable.
Plate Choke.	Feed-Back Cond.	Tubes (2).
Feed-Back Cond.	By-Pass.	By-Pass.
By-Pass.		

BALDWIN PACIFIC
QUALITY GUARANTEED
SAN FRANCISCO

Personal references to Nathaniel Baldwin will be included in Volume I of these SKETCH-BOOKS. Here, we are chiefly interested in his attempts to climb on the 45KC super-het band wagon, that commenced rolling in 1924.

Baldwin's earlier claim to fame rested solidly upon his design of rather superior head-phone sets, even though his business acumen was apparently second-rate, as he twice filed for voluntary bankruptcy before he left his native Mormon territory for another place with a large Mormon population - San Francisco, where Sam Brennan, another Mormon, had started the first newspaper in S.F. - and then refused to tythe the Church in Salt Lake City - but that's another story.

Like Best, Remler, Silver, Priess, Harkness, Baldwin designed a straight-forward super-het, with the IF transformer peaked at 45KC. He offered five models, always as kits, that a home-constructor could buy for $15 to $85 - the difference between the kits being the amount of hardware included. Basically, each model employed the same circuit, best expemplified by the Model "A", which is detailed hereinafter. The kits carried

"Improved Model A" Baldwin-Pacific 45,000 Cycle Super-Heterodyne

such names as QUINTET, PACIFIC RANGER, FAVORITE, COMPACT, and RAINBOW. That latter name derived from the fact that the coil included in that kit was wrapt with multi-coloured wires.

The various models varied in the manufacture of the standard parts used, such as AF transformers, Amperites, potentiomers, jacks and switches; but all used Baldwin-Pacific's IF and Oscillator coils. Actually, you could use similar coil configurations as offered by Melo-Heald, Remler, Lacault,etc. Prices of the various kits never included tubes, batteries or cabinets. A 3-point loop was also offered for $6.50, but most any loop would suffice.

All Baldwin-Pacific 45KC super-hets used V99 tubes, with an 01A in the second AF stage. The X99 tubes could also be used, as well as all 01As, with a change in the wiring of the filaments - which, incidentally, is recommended. To make use of 01As, the following changes are made:

The 20-ohm rheostat replaced with 6-ohm.
A .002 MF capacitor installed between filament and plate of the second IF stage.
Shield back of panel, inside of cabinet, oscillator coupler.
C and B voltages remain the same.

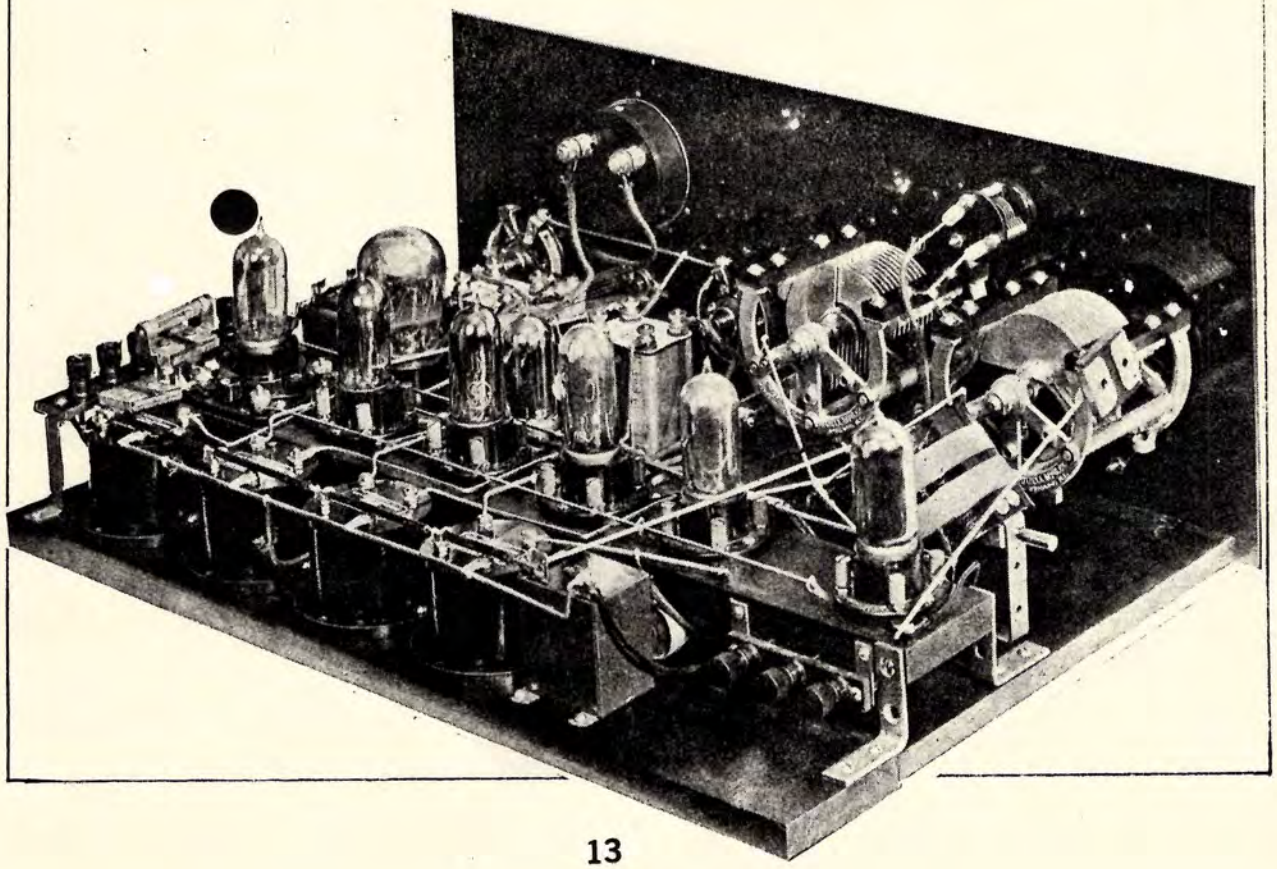

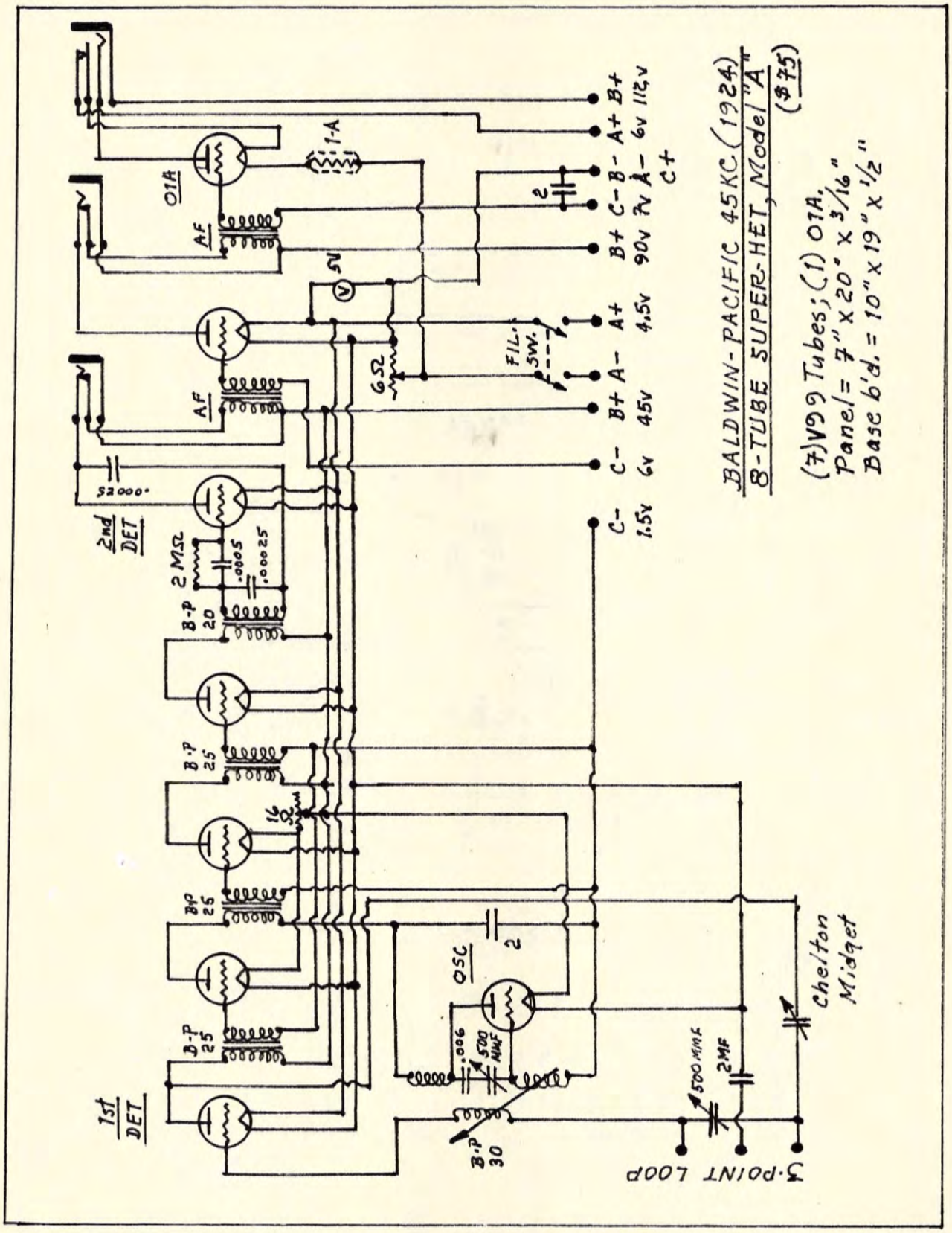
BALDWIN-PACIFIC 45KC. (1924)
8-TUBE SUPER-HET, Model "A"
($75)
(7) V9 Tubes; (1) O7A.
Panel = 7" x 20" x 3/16"
Base b'd. = 10" x 19" x 1/2"
C- 1.5v
C- C- 6v
B+ A- B+ 45v
A+ A+ 4.5v
B+ C- B- A+ B+
90v 7v A- 6v 112v
C+
1st DET
2nd DET
AF
AF
O7A
1-A
5V
65Ω
FIL. SW.
52000
2 MΩ
.0005
.00025
B-P 20
B-P 25
B-P 25
B-P 25
B-P 25
16 Ω
OSC
.006
500 MMF
B-P 30
500 MMF
2MF
Chelton Midget
4-POINT LOOP

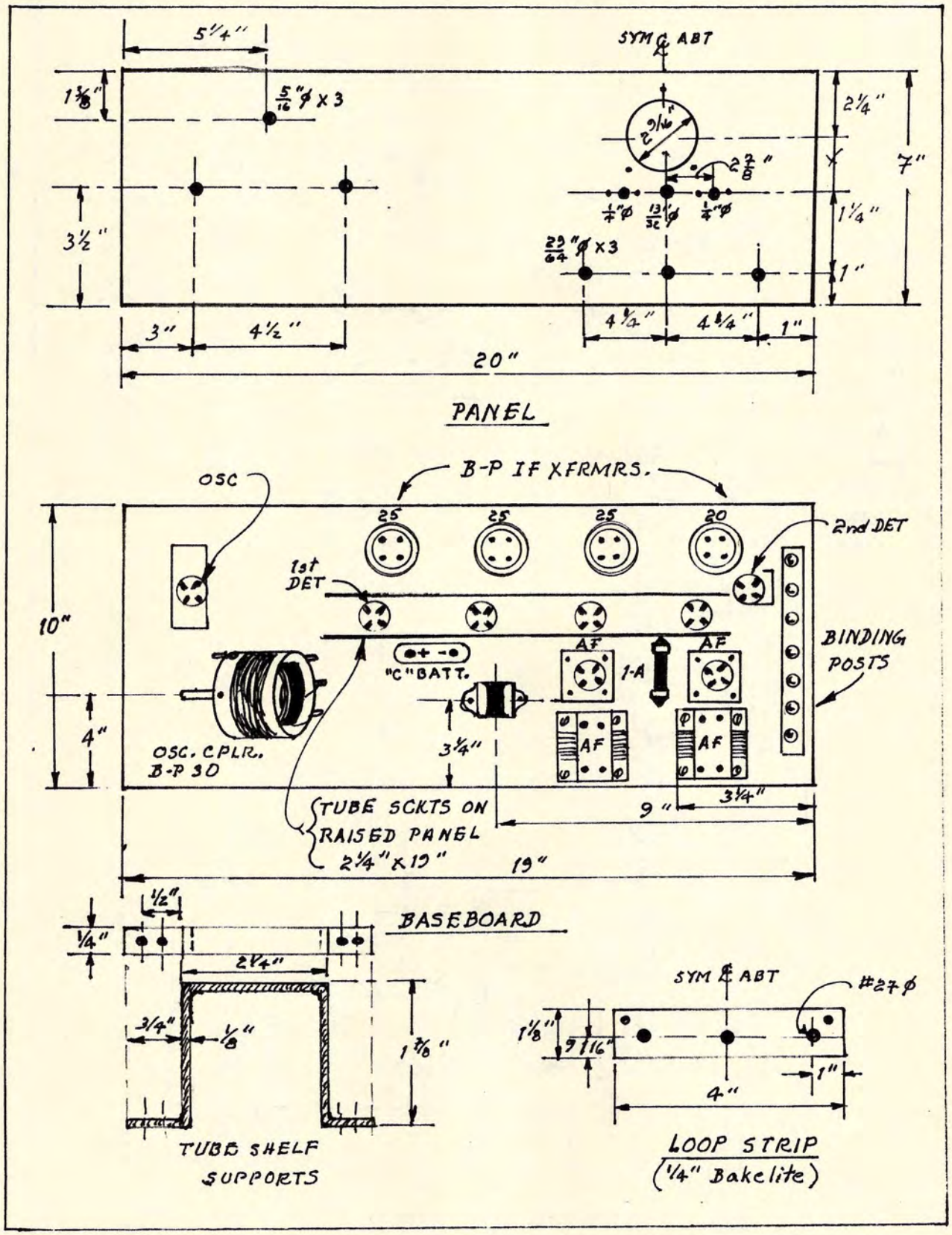
5¼"
SYM ℄ ABT
1⅜"
5/16"ϕ x 3
2¼"
2 9/16"
2⅞"
7"
1¼"
3½"
29/64"ϕ x 3
1"
3"
4½"
4¼"
4¼"
1"
20"
PANEL
OSC
B-P IF XFRMRS.
25
25
25
20
2nd DET
1st DET
10"
BINDING POSTS
"C" BATT.
AF
AF
1-A
AF
AF
4"
OSC. CPLR. B-P 30
3¼"
TUBE SCKTS ON RAISED PANEL 2¼" x 19"
9"
3¼"
19"
BASEBOARD
½"
¼"
2¼"
3/4"
⅛"
1⅞"
TUBE SHELF SUPPORTS
SYM ℄ ABT
#27 ϕ
1⅛"
9/16"
1"
4"
LOOP STRIP
(¼" Bakelite)

"Favorite-Model C" Baldwin-Pacific

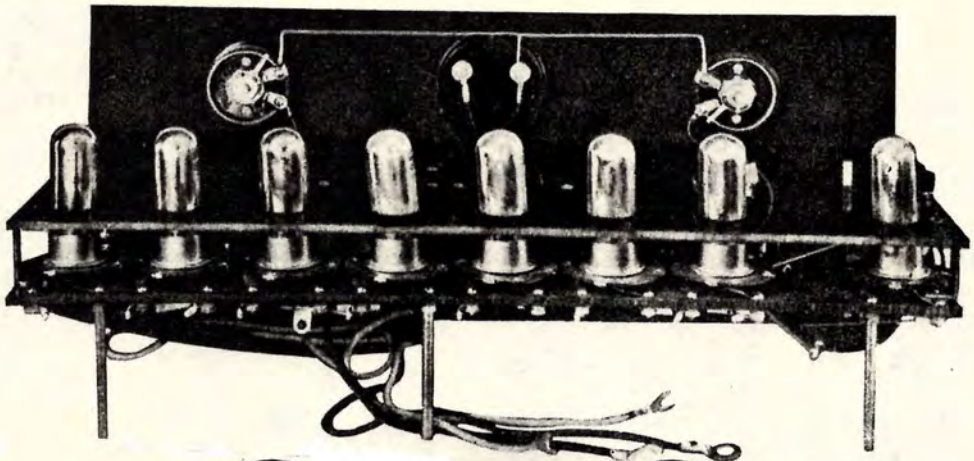

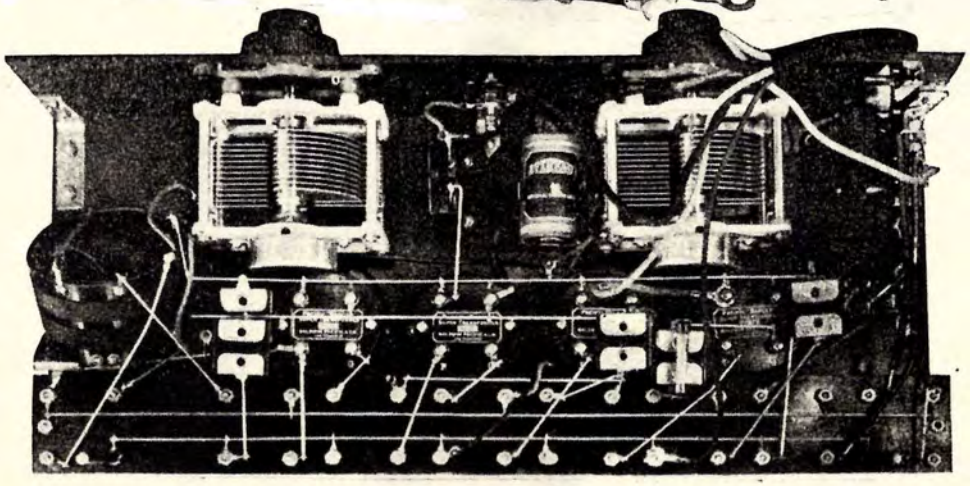

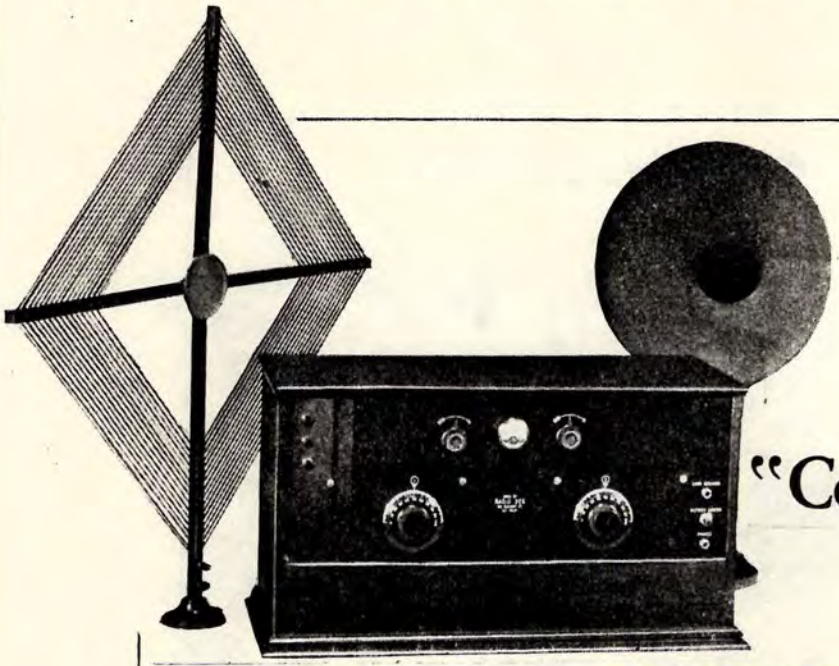

Baldwin-Pacific "Compact Model D"

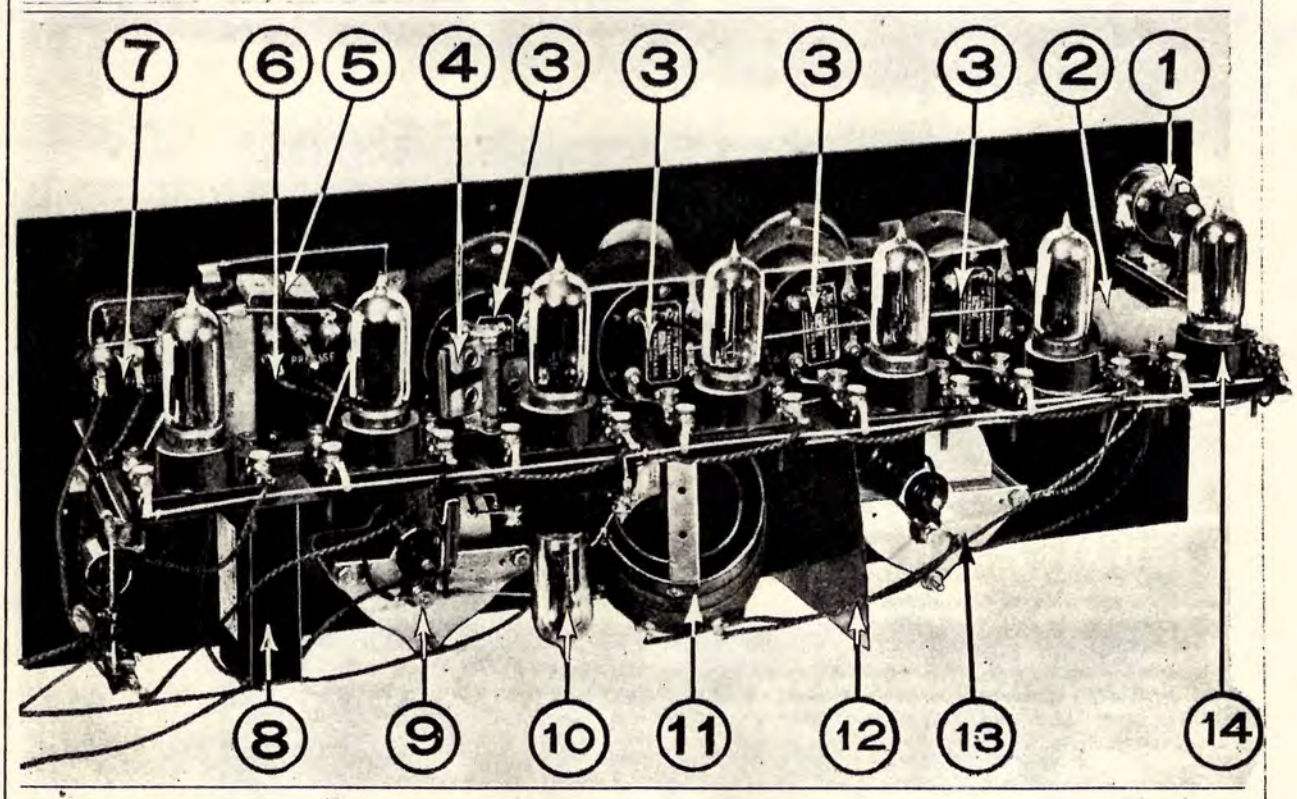

1. Regen. feed-back cond.
2. 2MF Condenser
3. #20 IF B-P Xfrmrs. (3) & #25 Xfrmr.
4. Grid-leak & cond.
5. By-pass.
6 & 7. AF Transformers.
8. 2 MF Condenser
9. OSC condneser.
10. OSC tube.
11. B-P #30 OSC cplr.
12. Shielding.
13. Tuning condenser.
14. First DET.

Note that OSC tube is mounted upside-down under sub-panel.

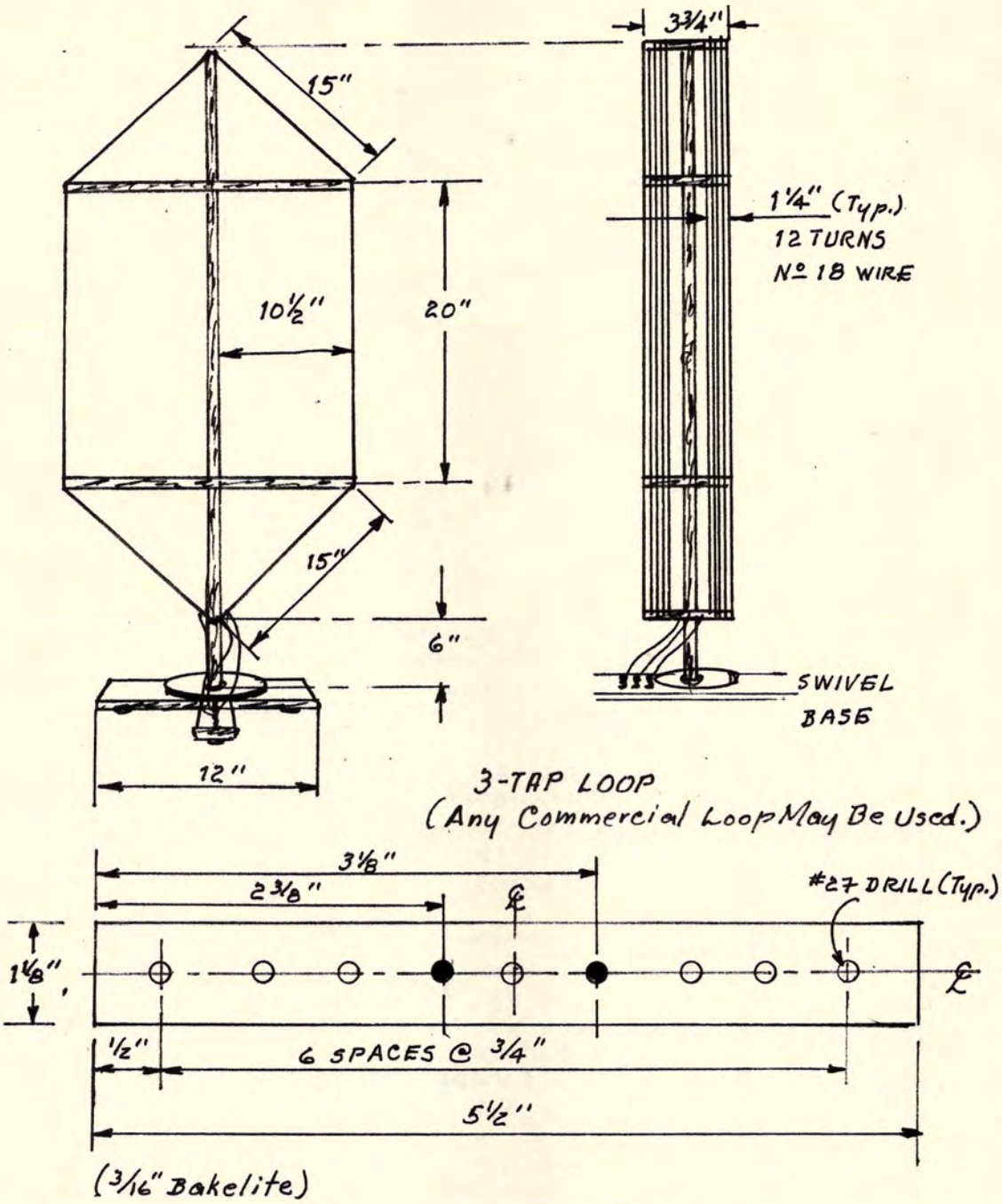

BALDWIN-PACIFIC Model "A" DETAILS

GERALD M. BEST & THE SUPER-HET

Like many another of our early radio pioneers, Gerald M. Best was exposed to Radio during the Kaiser's War, and also like many another enthusiast of the better educated kind, worked as technical editor for the mushrooming Radio media.

There can be no doubt as to his competence and his dedication to the infant art, and his writings included a Q&A column which was, in itself, an ongoing education in the fundamentals of Radio as was known at that time.

He designed several original circuits, ranging from a pre-amplifier to an audio deck and, of course, his many versions of a super-het circuit. The relationship between Best and E.M.Sargent and "Remler" has never been clearly established, even though all were involved with Gray & Danielson of Oakland at one time or another.

The two super-hets upon which Best's fame rests were his 45KC and 115KC circuits. Between the two there was the Remler 45KC, and there is more than a blood-relationship between the Remler and the Best designs. After the Remler 28 was offered the home-constructor, to be followed by the regular improvements and refinements and additions, circuitry attributed directly to Best seemed to have been dropt from latter-day media. That the Remler "Infradyne" also contributed to the subsequent Remlers and the Best super-hets is easily demonstrated by simply reviewing the circuits of each one.

In the following pages you will find the details of the Best 45KC and the 115KC super-hets, and I commend them to your perusal. If you have an old Best laying in the basement gathering dust, and you've wondered what to do with it, take it out, dust it off, and restore it from the data you will find hereinafter. It will repay your efforts, not the least wise in pulling in the BBC or NHK without trying.

There were three versions of the Best 45KC super-het, their configurations shown herein. All used 99 tubes, and all reflected one man's avid desire to express his love of Radio. His 8-tube battery set of 1925 would be the simplest to have a go at constructing, and then simply add on the inevitable improvements and refinements, as shown in the final version. You might also enjoy comparing the "Infradyne 28" with the Best 115KC super-het.....

BEST's MIDGET SUPER-HET, 1926; Sht.1

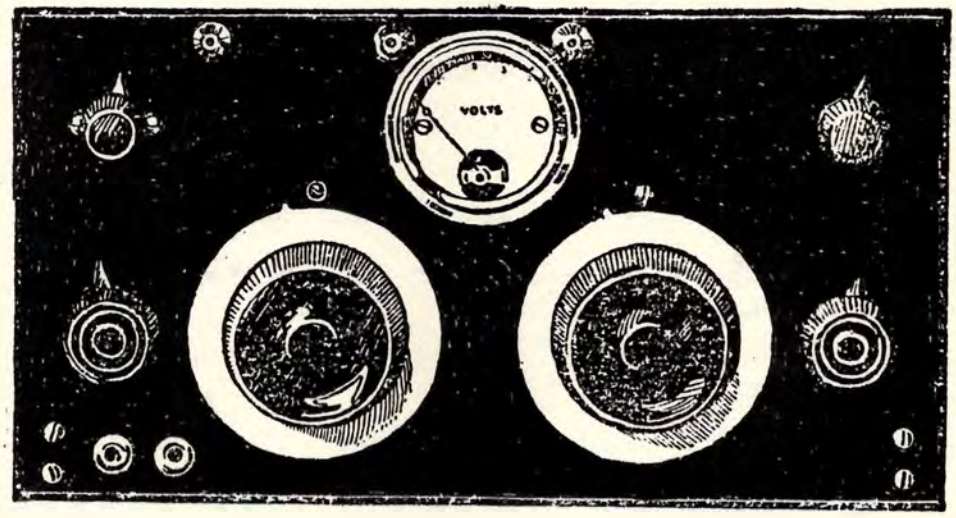

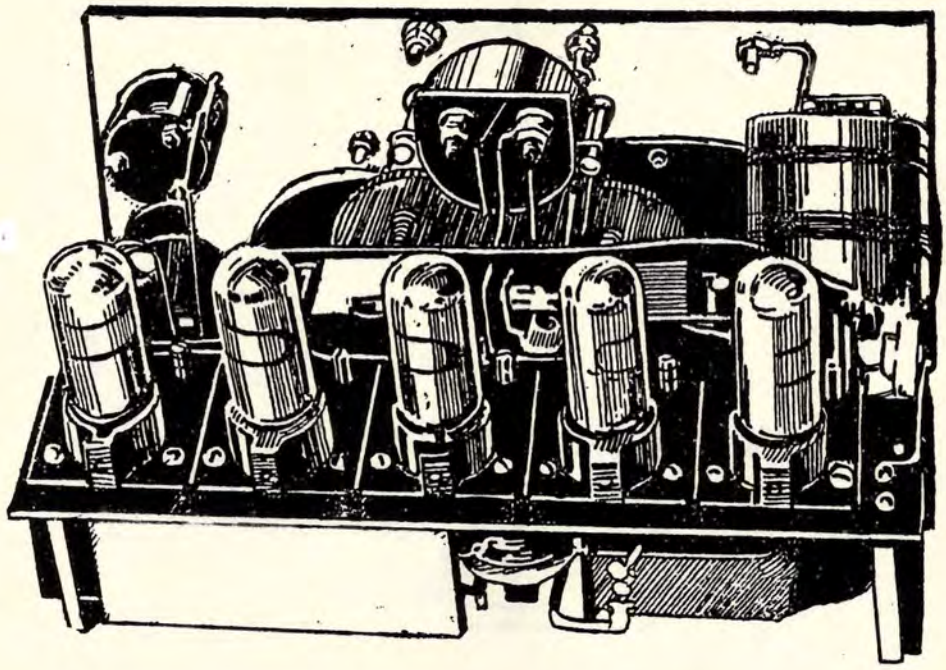

BEST's MIDGET SUPER-HET, 1926; Sht. 2

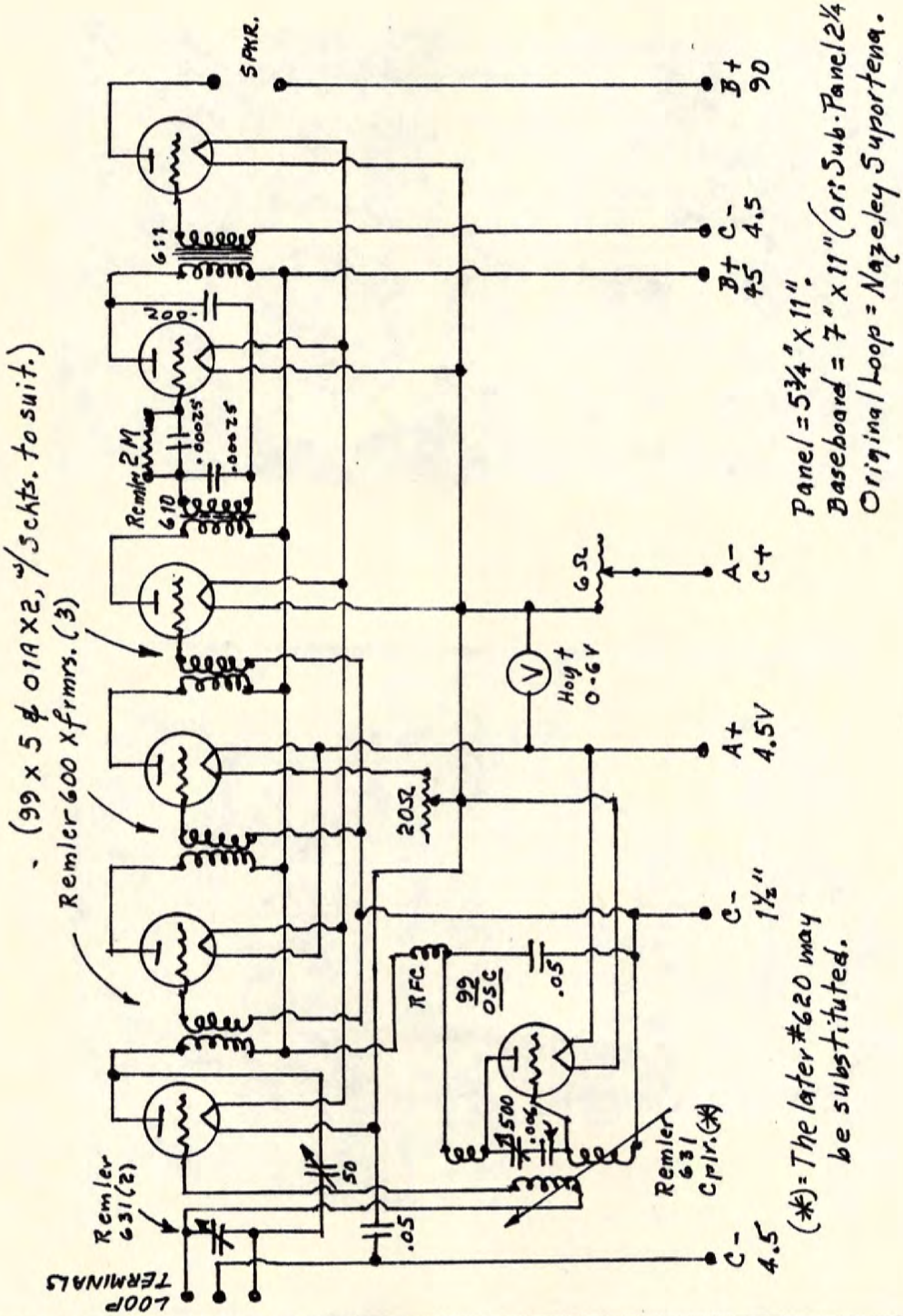

BEST's 45 KC SUPER-HET EVOLUTION

The two sketches below show the changes Best made in the physical configurations of his 45KC super-het, 1926 and 1927, respectively. The advent of the Remler 45 KC super-het, however, removed the Best versions rather quickly from the minds of the home-constructor of the period. Of academic interest.

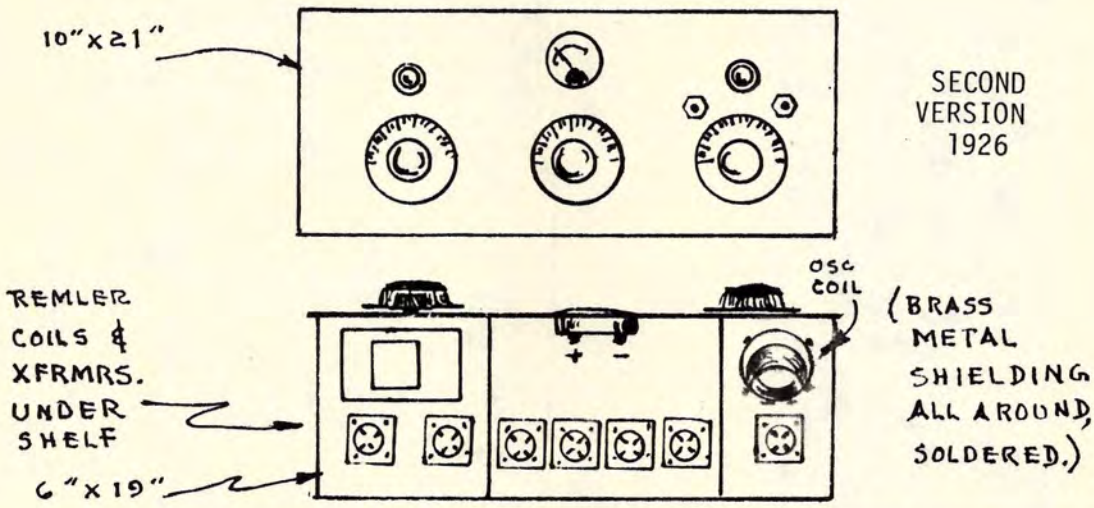

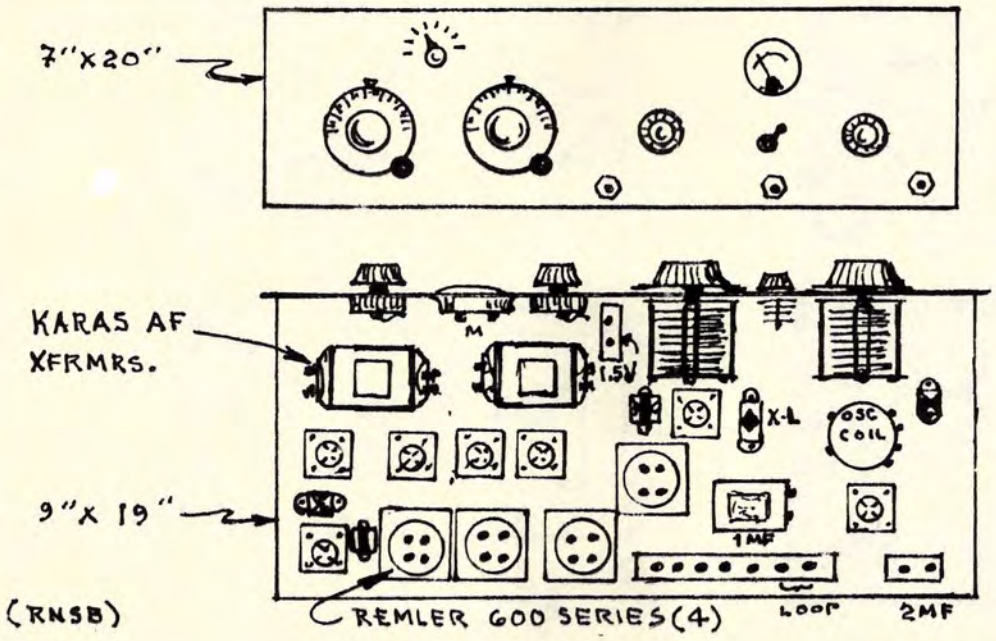

BEST's 45 KC SUPER-HET, 1926: Sht. 1

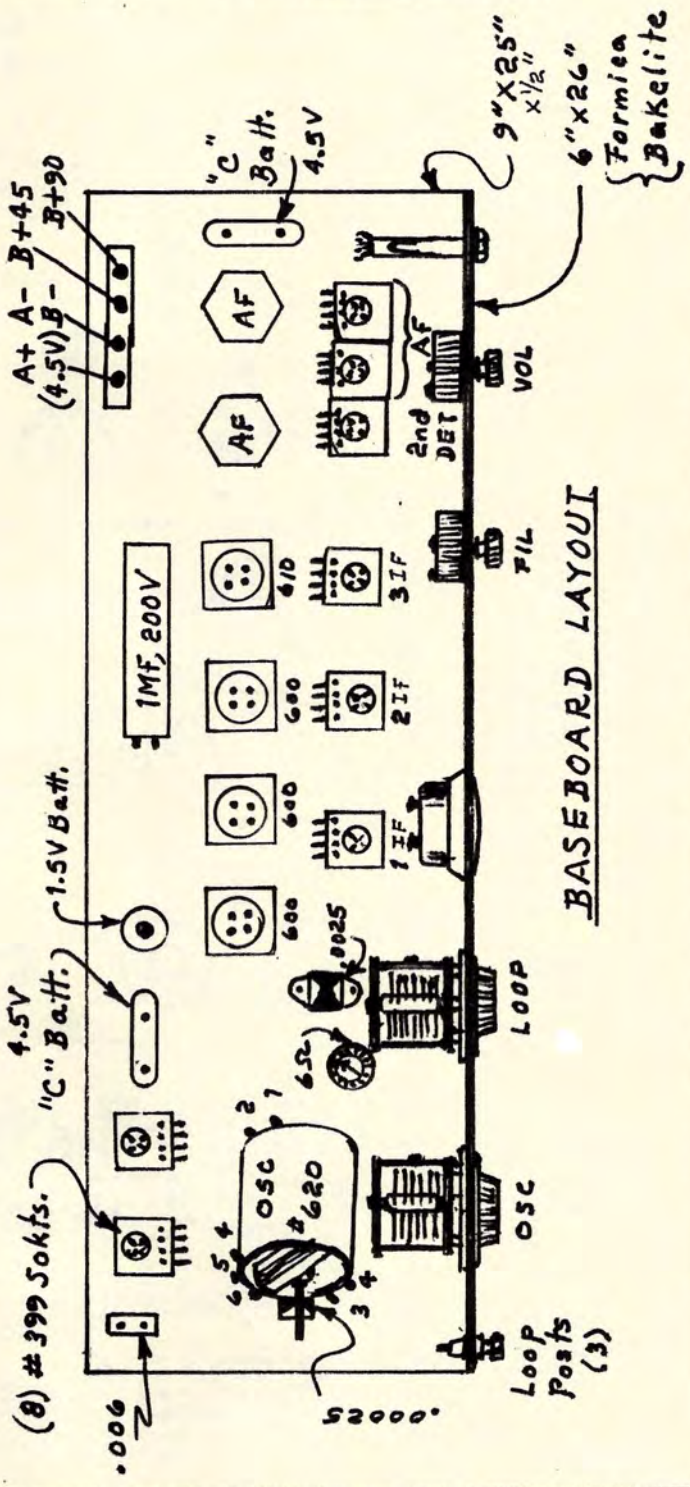

BEST's 45 KC SUPER-HET, 1926; Sht. 2

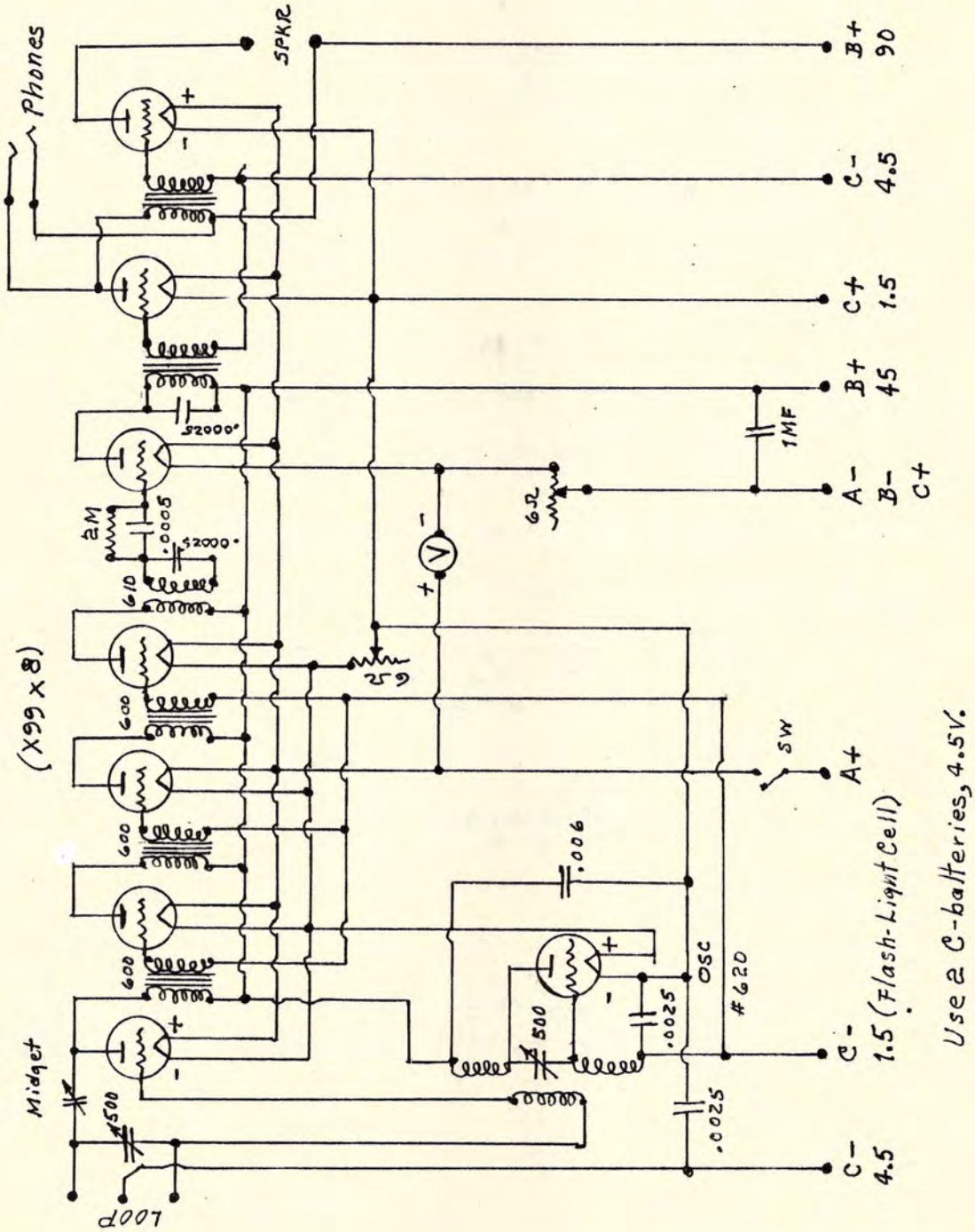

BEST's 45 KC SUPER-HET, 1926; Sht. 3

General Parts List:

REMLER #600 Transformers (3).
#620 Oscillator Coil.
#610 Tuned Circuit Transformer.
#399 Sockets (8)
General Radio #247A Variables (2).
Chelton Midget Variable.
Federal #18 Rheostats.
Jewell 0-5VDC Voltmeter, #531.
Frost #133 Open Circuit Jack.
Stromberg-Carlson AF Transformers, 3:1 (2).

3-Point Loop Note:

The 3-point loop was an application of the Armstrong circuit, by which a sufficient amount of energy was fed back from the 1st DET to the loop circuit through a .00025 mf condenser. This lowered the loop resistance, thereby increasing selectivity and signal strength.

Voltmeter Current Consumption should not exceed 10 mA.

Grid & Oscillator Coil Data:

OSC = 70 turns DCC wire, #26, in two sections of 35T each; wound on a 2.250" Ø tube.

GRID = 20T, #26 DCC wire, wound on a 1.625" Ø tube, and arranged to rotate within the OSC coil. Use pig-tails for connexions.

Panel = 6" x 26".

Baseboard = 9" x 25" x .5".

Note that all tubes were X99s; use of V99s was not advised. Also that two seperate C-batteries were called for.

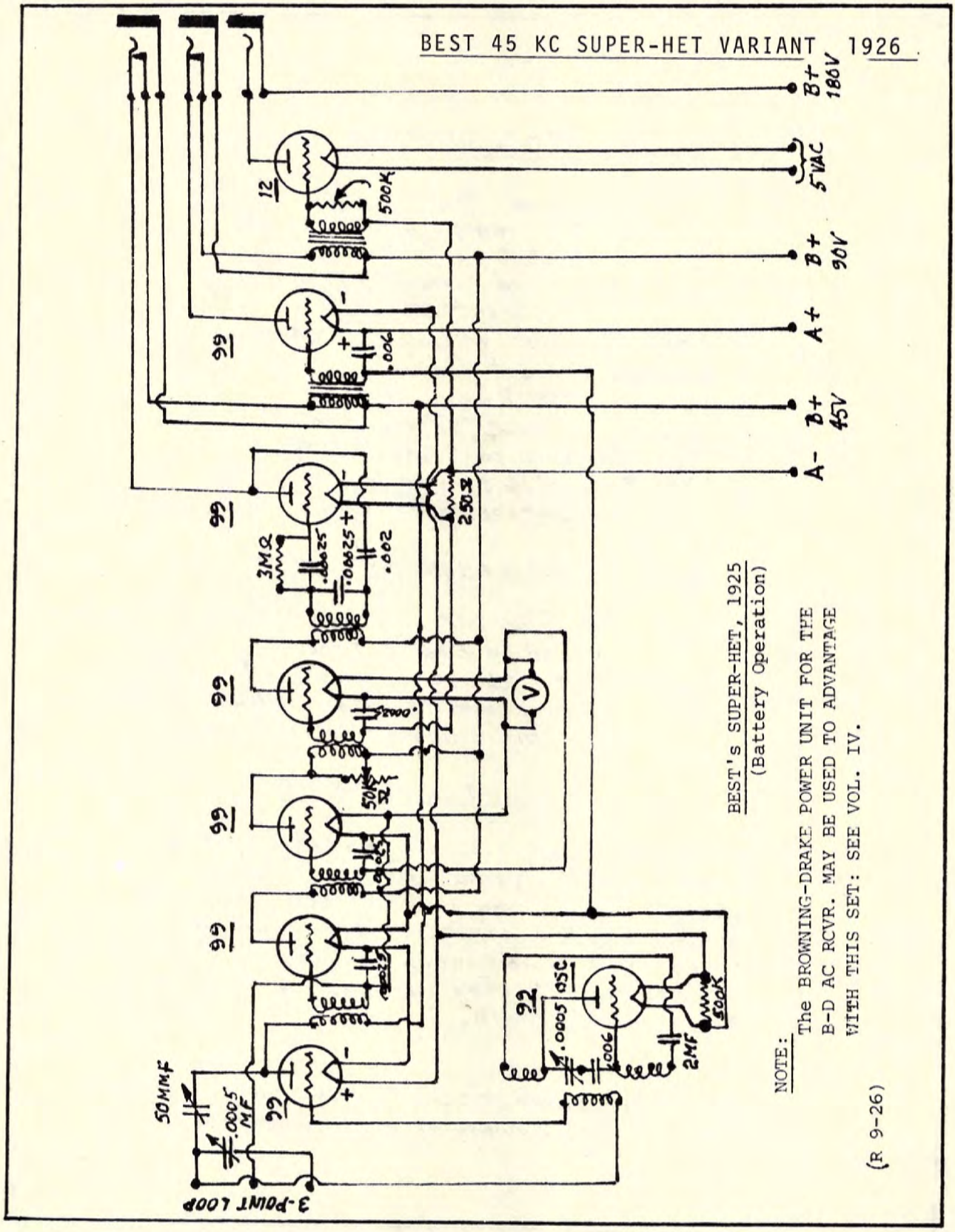

BEST's SUPER-HET, 1925
(Battery Operation)

NOTE:
The BROWNING-DRAKE POWER UNIT FOR THE B-D AC RCVR. MAY BE USED TO ADVANTAGE WITH THIS SET: SEE VOL. IV.

(R 9-26)

(Sht. 3)

BEST'S 45 KC. SUPER-HET NOTES

General Parts List

1. REMLER IF Transformers #600 (3).
2. " OSC Coil #620.
3. " Tuned Circuit Xfrmr. #610.
4. " Sockets #399 (8).
5. GENERAL RADIO Variables #247A (2). (21 PL)
6. CHELTEN Midget Variable.
7. FEDERAL #18 Rheostats.
8. JEWELL 0-5VDC Voltmeter.
9. FROST #133 Open-Circuit Jack.
10. 30' #16 or #14 tinned copper wire.
11. STROMBERG-CARLSON AF Xfrms., or equal 3:1.

GRID & OSCILLATOR COIL DATA

OSC = 70T #26 DCC in 2 sexions of 35T each, wound on 2¼" ø tube.

GRID = 20T #26 DCC wound on 1⅝" ø tube, & arranged to rotate w/in OSC coil. Use pig-tails for connexions.

3-POINT LOOP NOTE

The 3-point loop is an application of the Armstrong circuit, by which a sufficient amount of energy is fed back from the 1st DET to the loop circuit, through the .0025 mmf condenser. This lowers the loop resistance, thereby increasing selectivity & signal strength.

Voltmeter current consumption should not exceed 10 mA. Beware of cheap meters.

BEST 45 KC SUPER-HET, 1926; Sht. 4

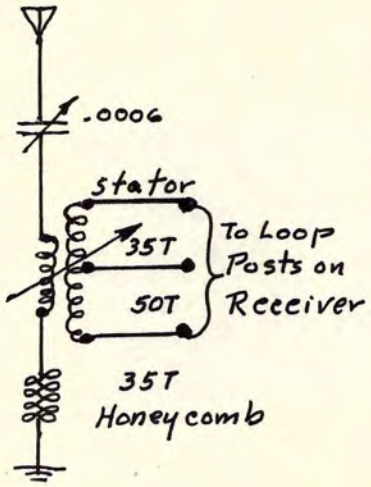

Best's ANTENNA TUNER is shown at left. It was also adapted for the first REMLER 45 KC kit.

On reflexion, it will also be apparent that the tuner could be applied to most any early TRF. The size of the honeycomb coil - i.e., diameter - was not critical.

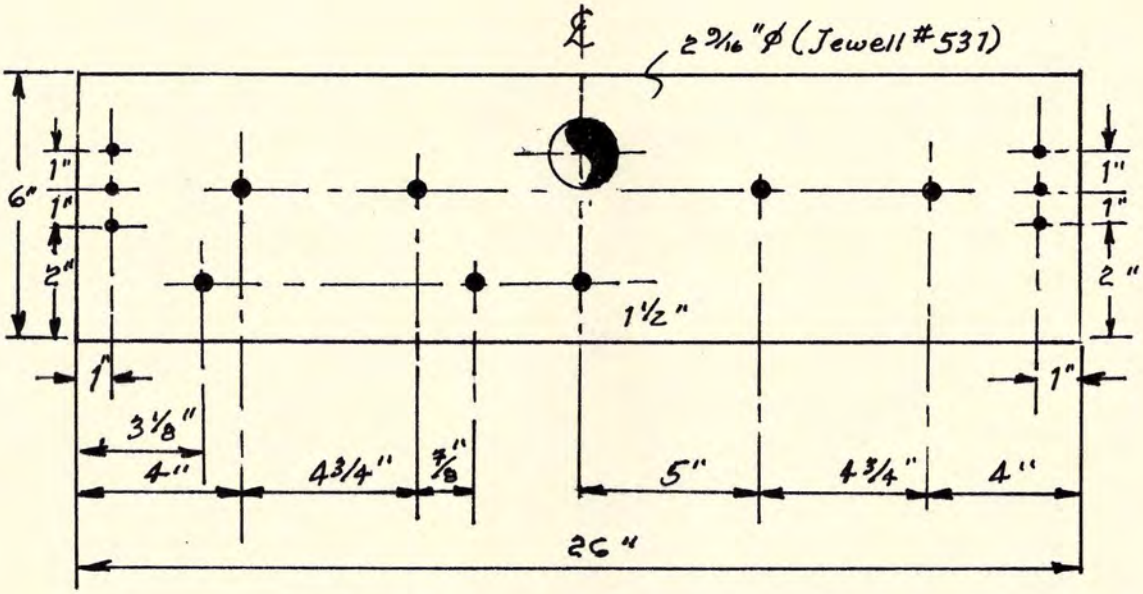

THE MAJOR PANEL HOLE PATTERNS

Hole diameters to suit components you have on hand; panel may be Bakelite, Formica, Hard Rubber, "Celeron", etc.

THE BEST 115 KC. SUPERHETERODYNE

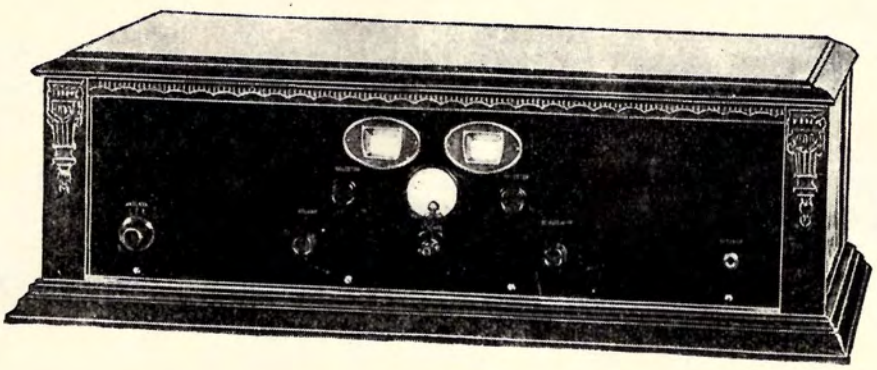

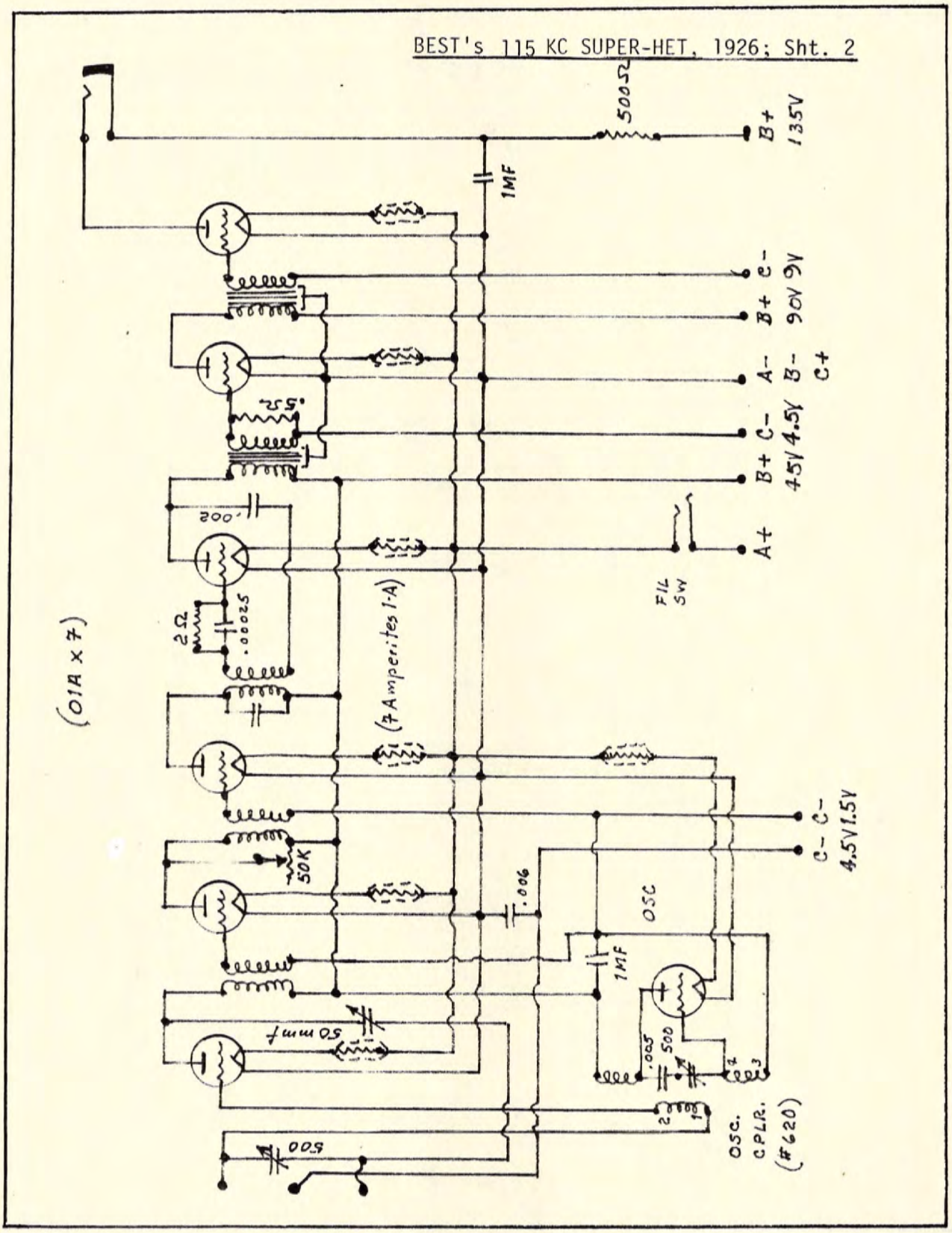
BEST's 115 KC SUPER-HET, 1926; Sht. 2
500Ω
B+ 135V
1MF
B+ C- 45V
A- B- 4.5V
B+ C- 90V
C+
A+
FIL SW
.52
.002
2Ω
.00025
(01A x 7)
(7 Amperites 1-A)
50K
.006
OSC
1MF
.005
500
50mmf
500
C- C- 4.5V 1.5V
OSC. CPLR. (#620)

NOTES

BRAXTON-KING Model A SUPER-HET, 1929;Sht.1

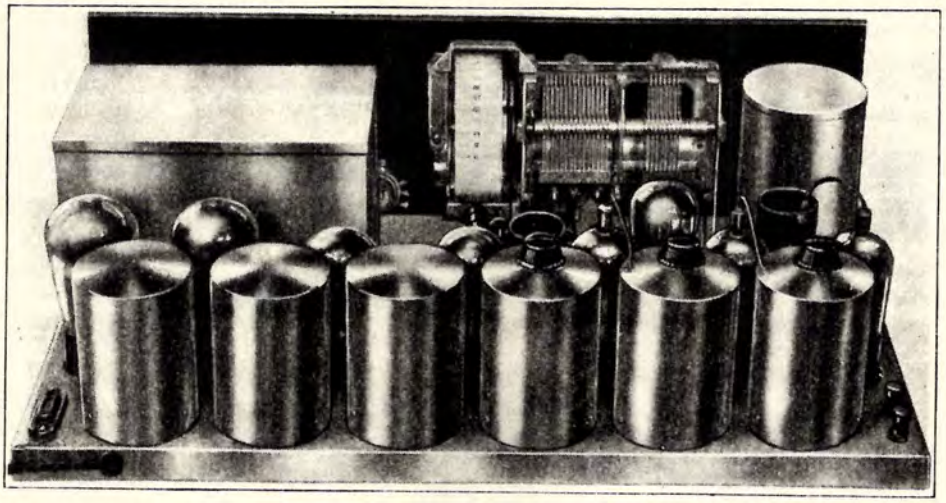

($135)

The Mississippi Radio Company of St. Louis offered kits under the marque "Braxton-King" for about five years. They were among the first to design and stay with individually tuned RF transformers. They also offered a short-wave kit, similar to Aero's, which worked rather well. The Models B and C were essentially tuners; the Model A was a complete offering with its own power supply.

MODEL B

($75)

MODEL C

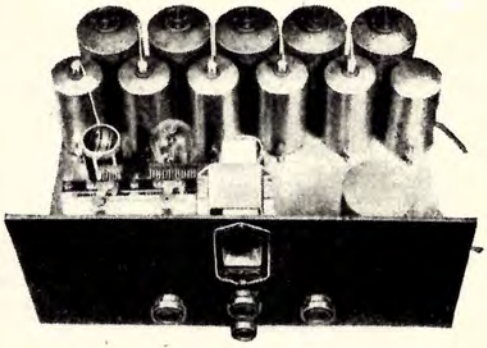

($95)

BRAXTON-KING Model A SUPER-HET, 1929; Sht. 2

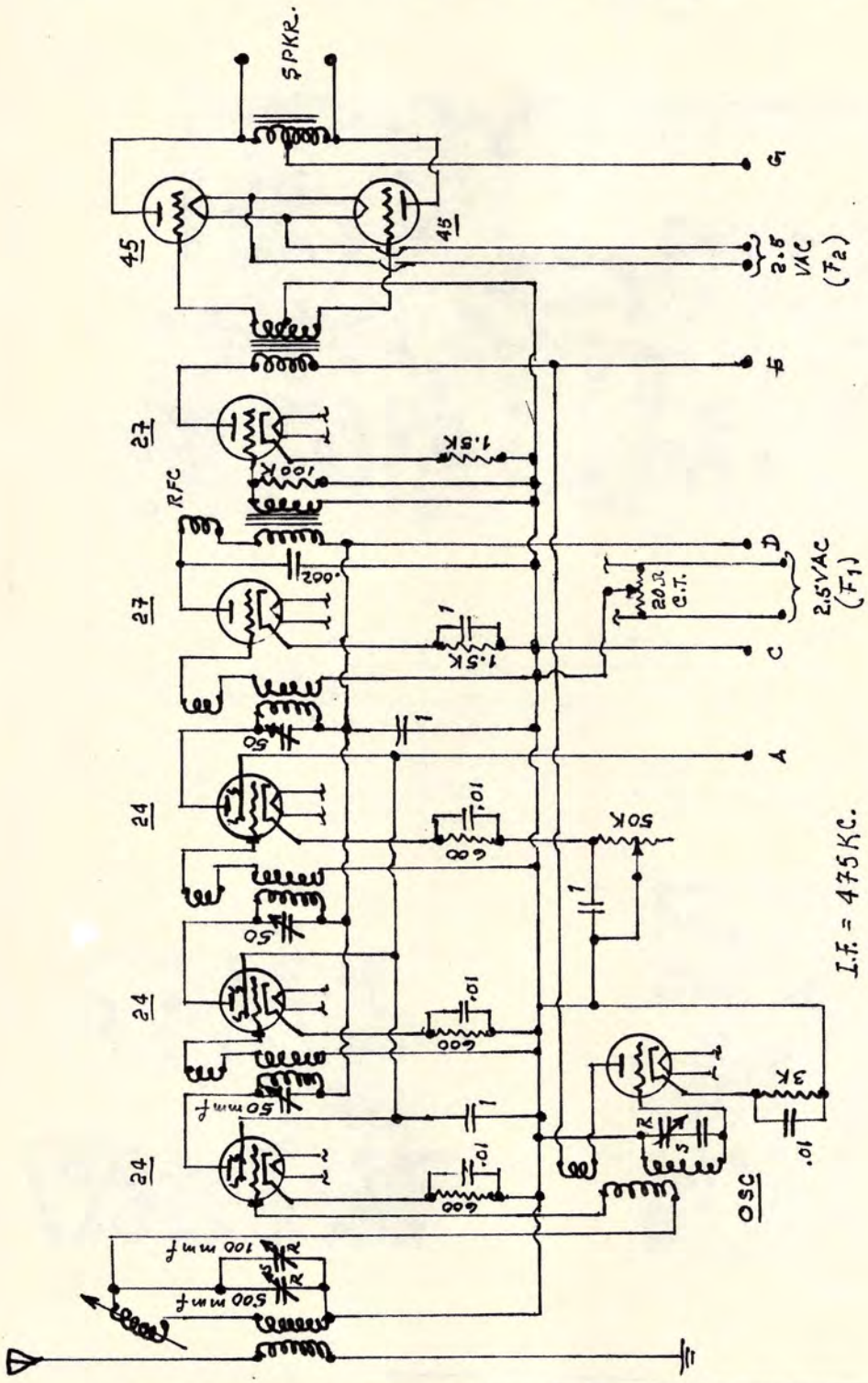

BRAXTON-KING Model A SUPER-HET POWER SUPPLY;Sht.3

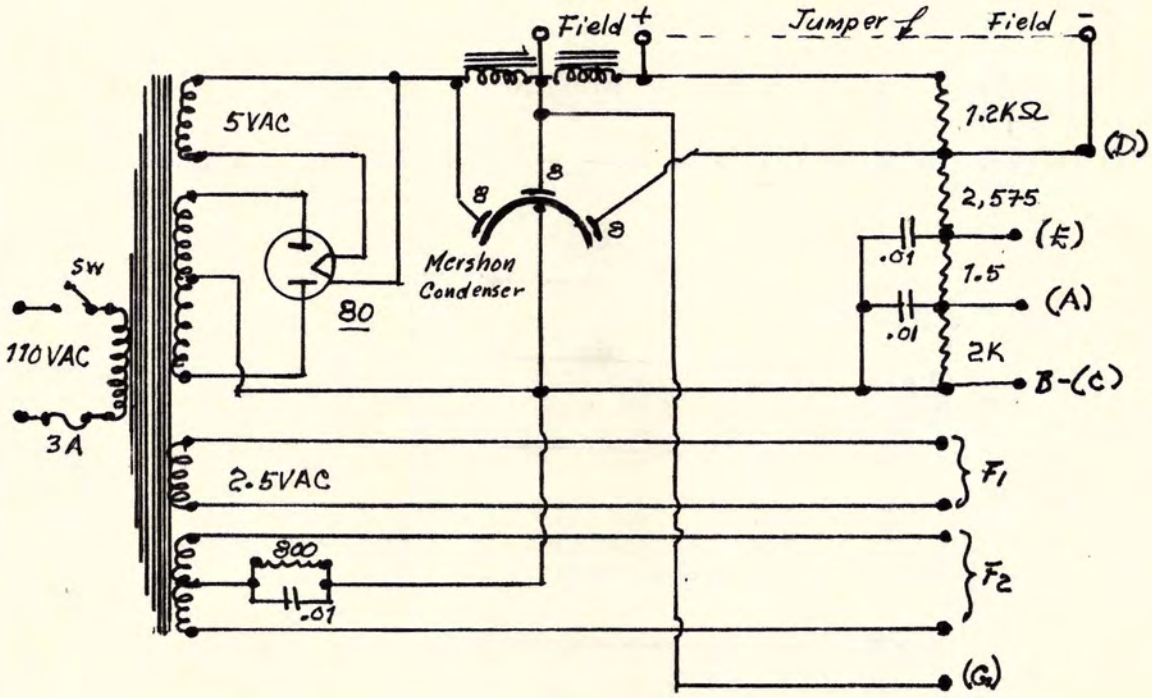

BREMER-TULLY SUPER-HET, 1924

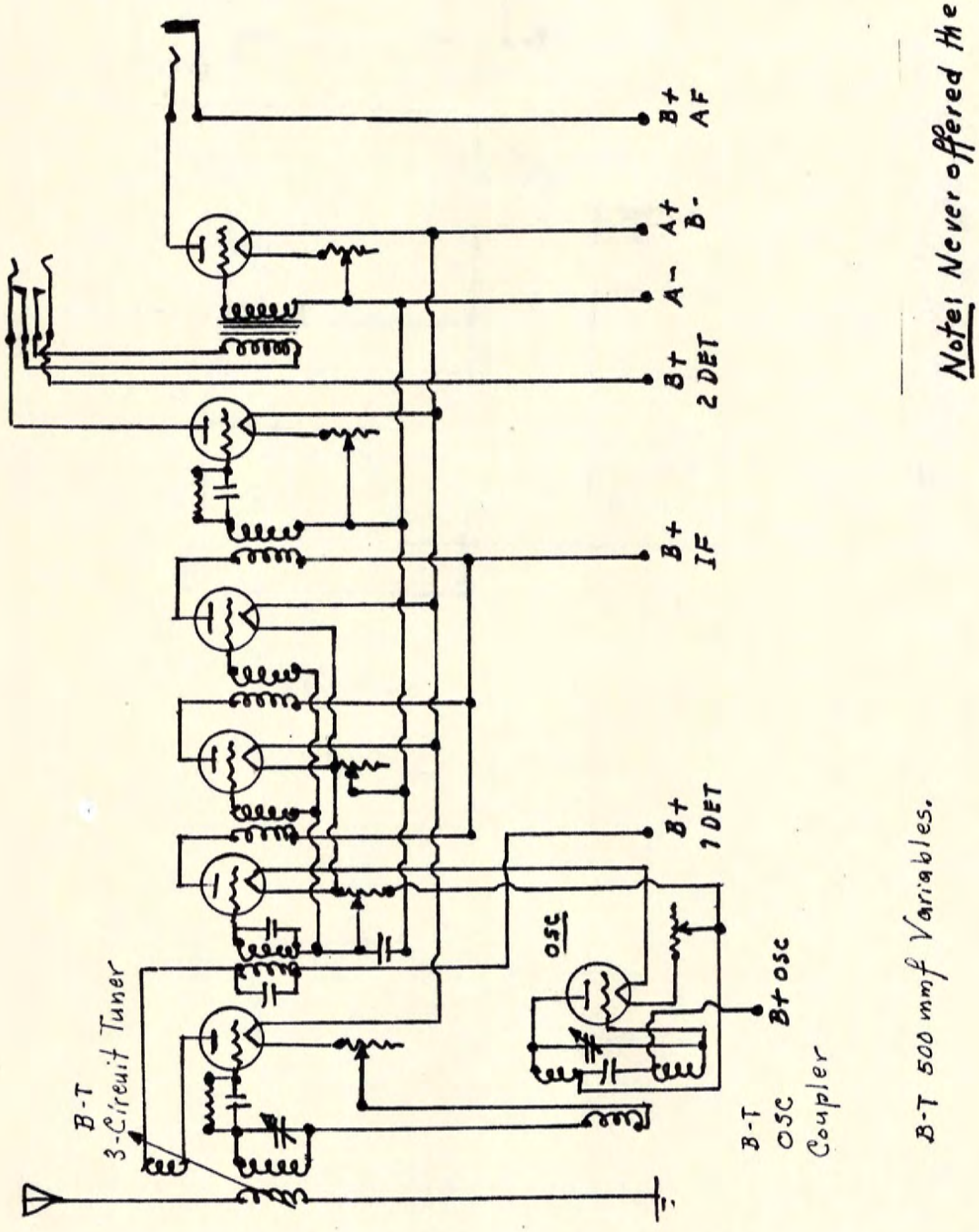

Note: Never offered the public.

B-T 500 mmf Variables.

BRYANT "MAGISTER" SUPER-HET, 1929; Sht. 1

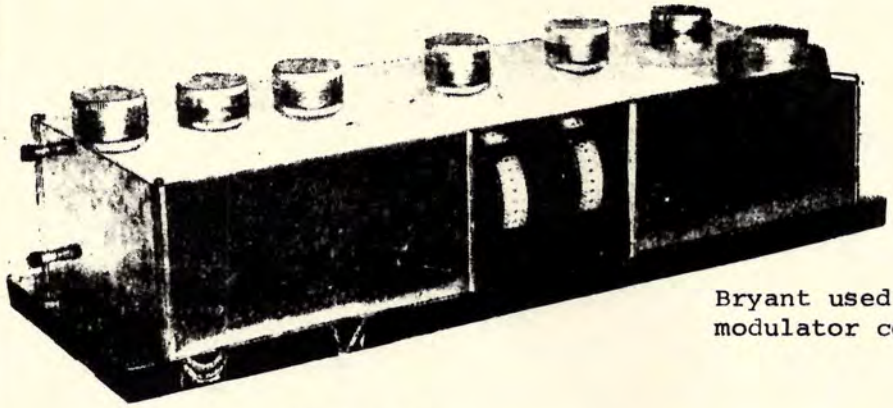

Bryant used the "Ultradyne" modulator concept of Lacault.

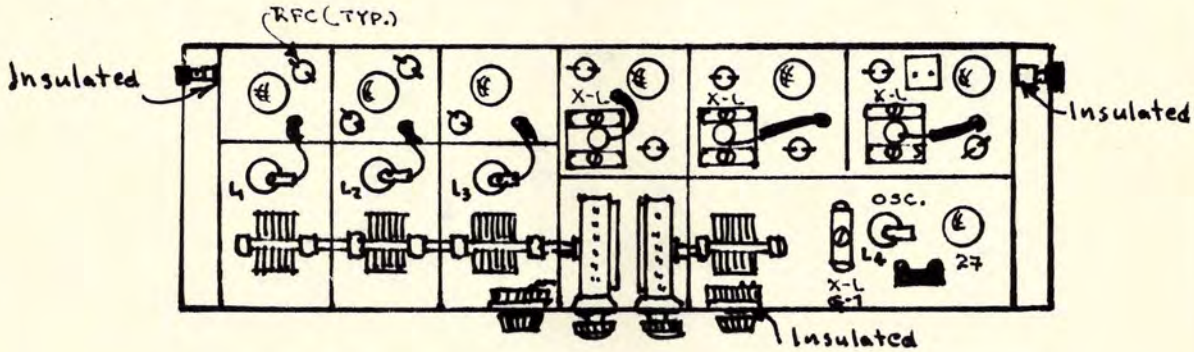

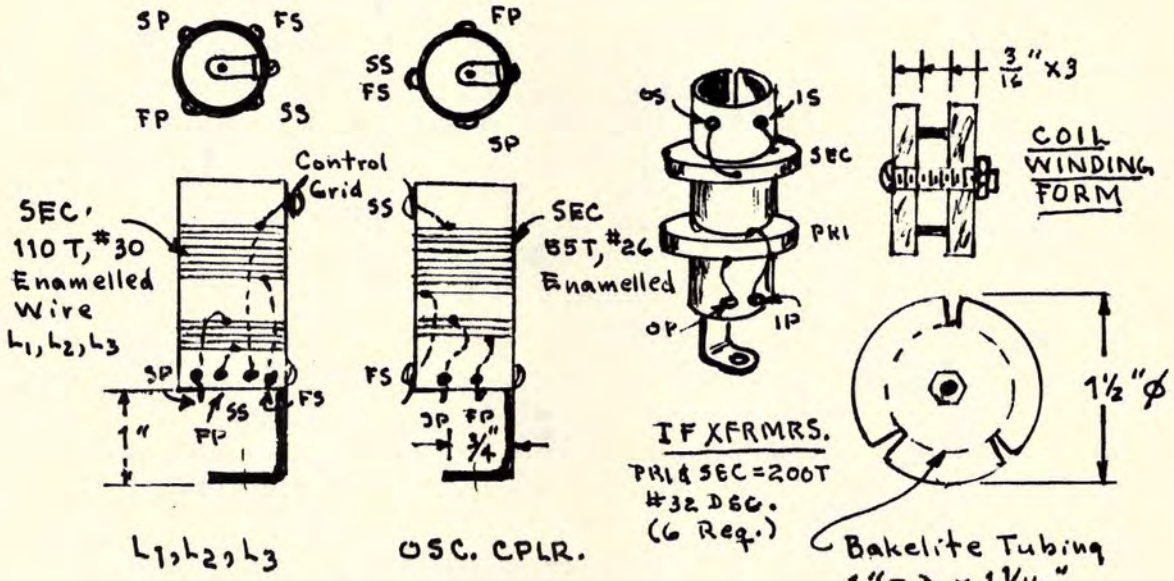

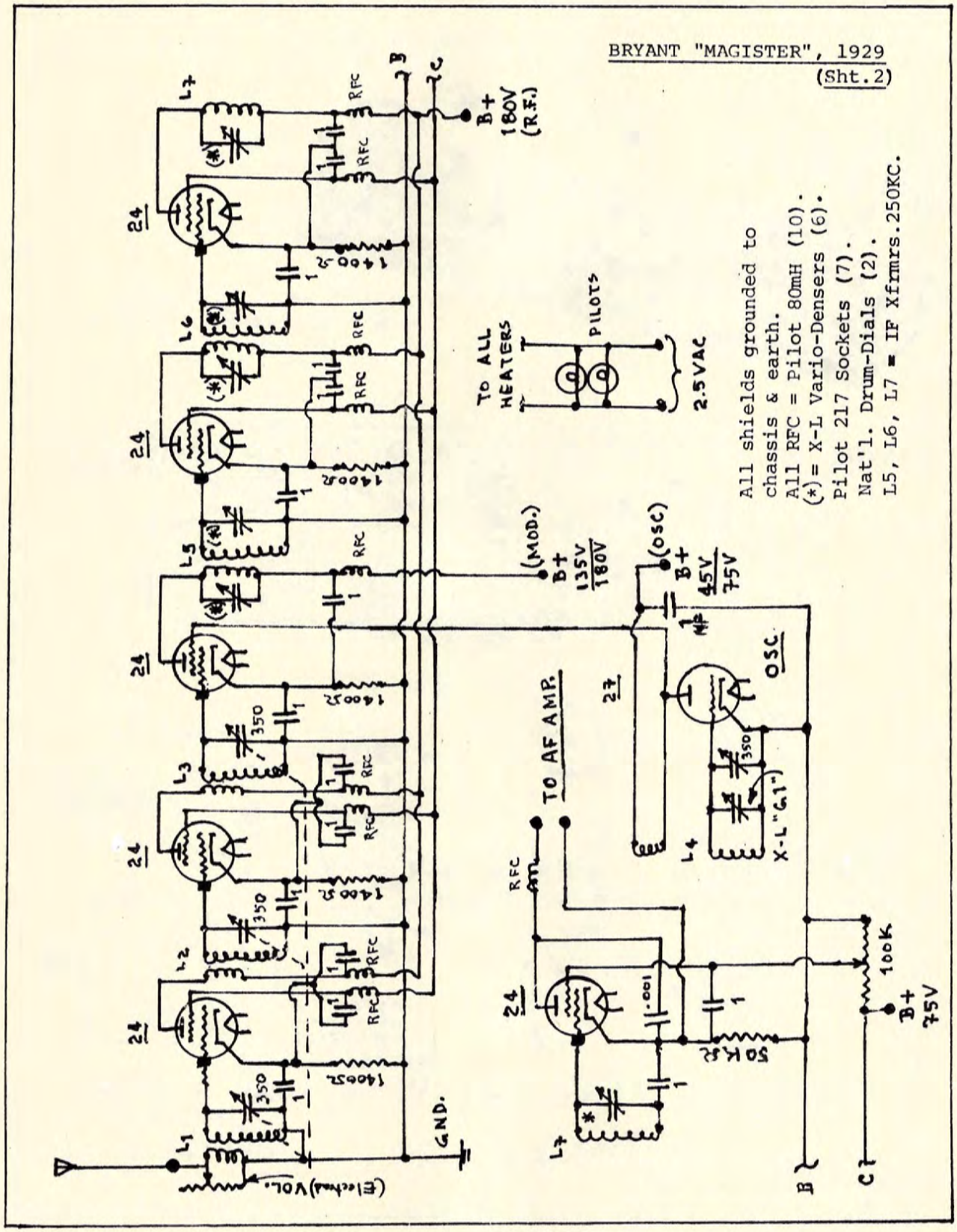
BRYANT "MAGISTER", 1929
(Sht.2)
All shields grounded to chassis & earth.
All RFC = Pilot 80mH (10).
(*) = X-L Vario-Densers (6).
Pilot 217 Sockets (7).
Nat'l. Drum-Dials (2).
L5, L6, L7 = IF Xfmrs.250KC.
TO ALL HEATERS
PILOTS
2.5VAC
B+ 180V (R.F.)
(MOD.) B+ 135V 180V
(OSC) B+ 45V 75V
TO AF AMR.
OSC
X-L "G1"
B+ 75V
GND.
(Elec'tnd) VOL.
RFC
1400Ω
350
100K
50KΩ
.001
24
27

CARBORUNDUM 150 KC SUPER-HET, 1927;Sht.1

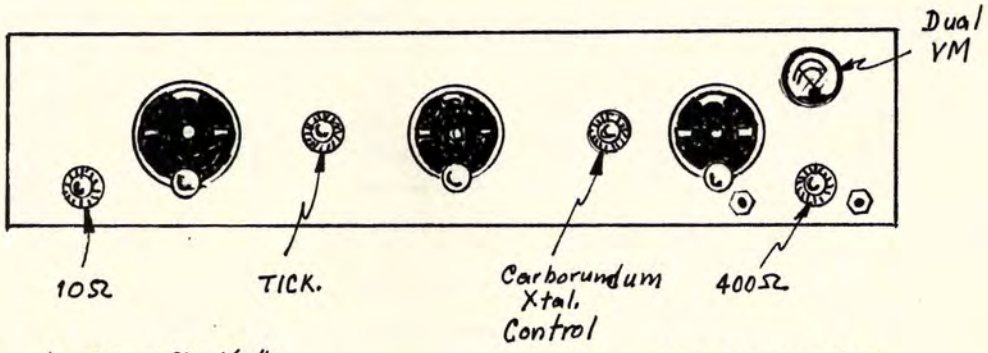

Panel = 9" x 36" x 1/4"
Sub-Panel = 10" x 35" x 1/4"
(Insuline / Celeron / Radion)

FRONT VIEW

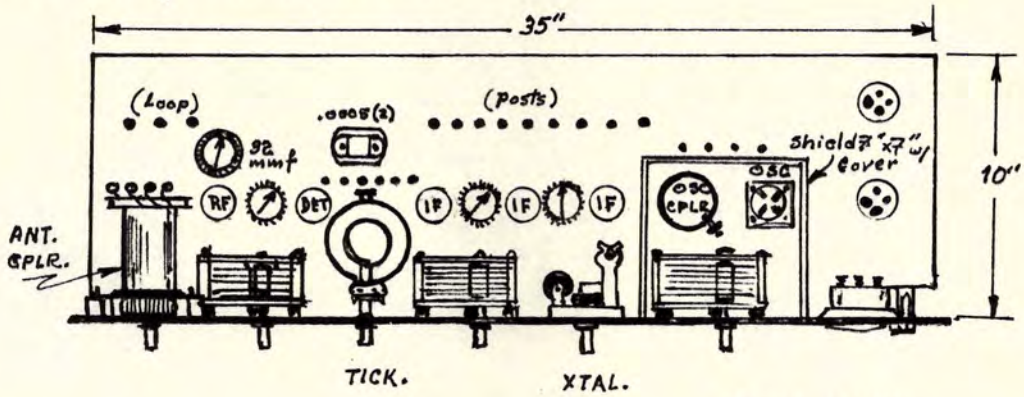

PLAN VIEW

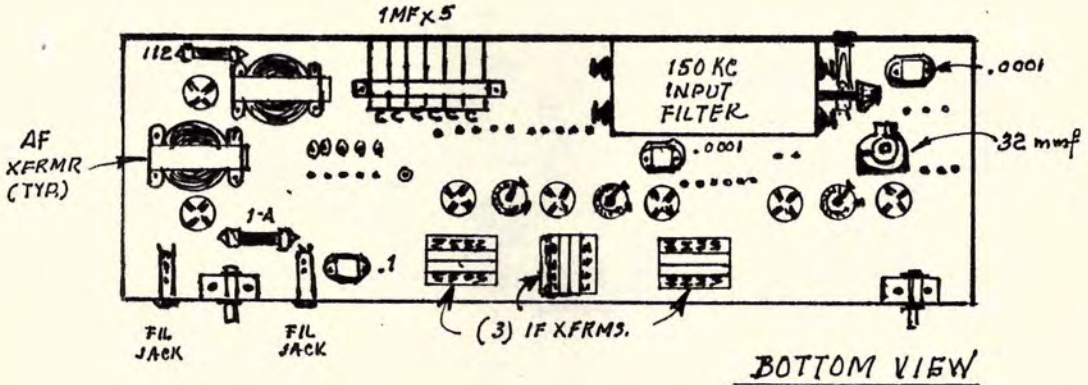

BOTTOM VIEW

(AHB 4-27)

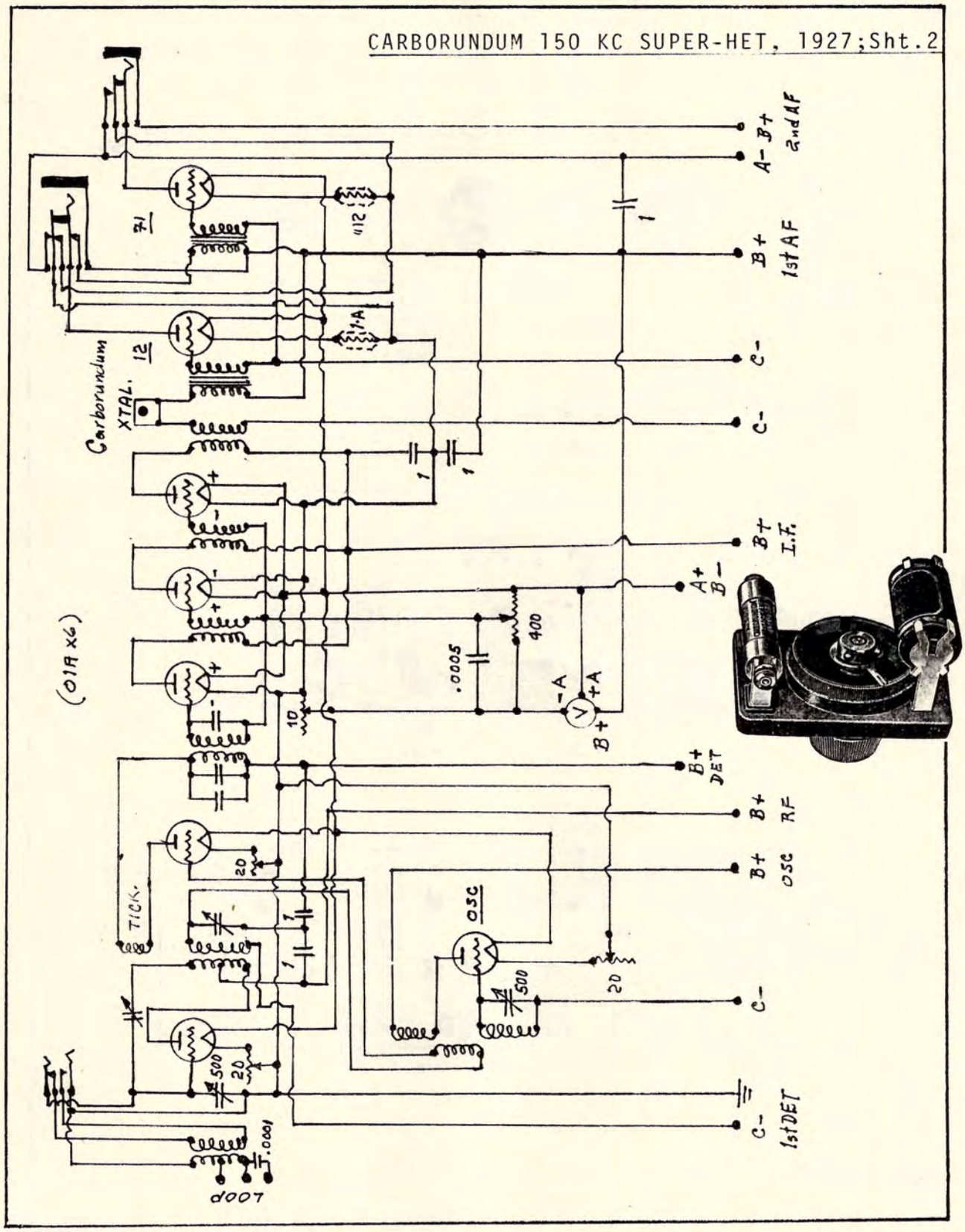
CARBORUNDUM 150 KC SUPER-HET, 1927;Sht.2
71
112
1-A
12
Carborundum
XTAL.
(01A x6)
TICK
LOOP
.001
500
20
10
.0005
400
-A
+A
B+
OSC
A- B+
2nd AF
B+
1st AF
C-
C-
B+
I.F.
A+
B-
B+
DET
B+
RF
B+
OSC
C-
1st DET
C-

CARBORUNDUM 150 KC SUPER-HET, 1927; Sht. 3

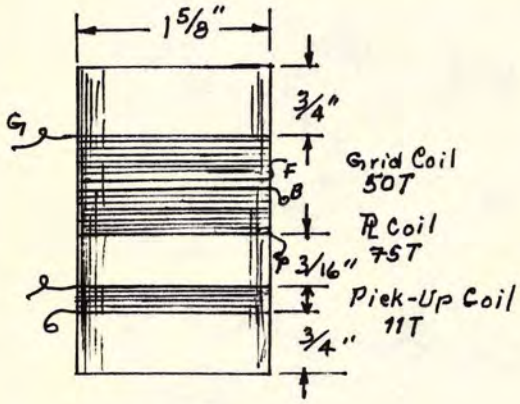

#32 DSC WIRE

OSC. CPLR.
(Special)

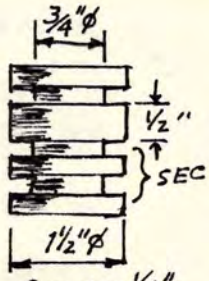

Spacing 1/4"
All Sexions
Except As
Shown.

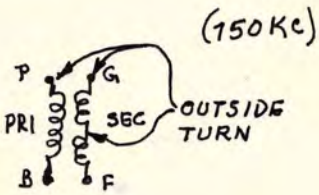

PRI = 250T #32 DSC
SEC = 450T #32 DSC
IN EACH SLOT.
(Wood Bobbin)

INPUT-FILTER I.F. TRANSFORMER.
(Commercial Items Were Offered by Geo. Walker (Victoreen) & Madison Radio Co. & RCA.)

NOTES:

1. Loop jack mounted @ rear of sub-panel.
2. Set may be operated w/out a loop, aerial, or ground!
3. 1st RF & 1st DET tuning condensers are not critical.

MAJOR PARTS:

Hammarlund 500 mmf Variables (2.) / Amsco.
" 35 mmf Midget Variable.
" ANT Coupler / Aero.
" RF Xfrmr. w/ Tickler.
Carborundum Unit (Xtal. DET.).
RCA 150 KC IF Xfrmrs. (3); 150 KC Input Filter.
AF Transformers, Federal (2).
X-L Binding Posts (12).
Amperites: 1-A & 112.
Dials (3), Mar-Co 4" Vernier.
Meter, Jewell, 3-Post Type.
Shield Box w/ Cover, Alcoa - 6"x7"x7".
F/L Control Jacks, Single & Double Circuit Type.
Single Circuit Jack.
Rheostats, 10Ω & 20Ω; Carter.
Fixed Condensers As Shown.

CLARK "SUPER-OCTETTE" SUPER-HET; 1925; 1

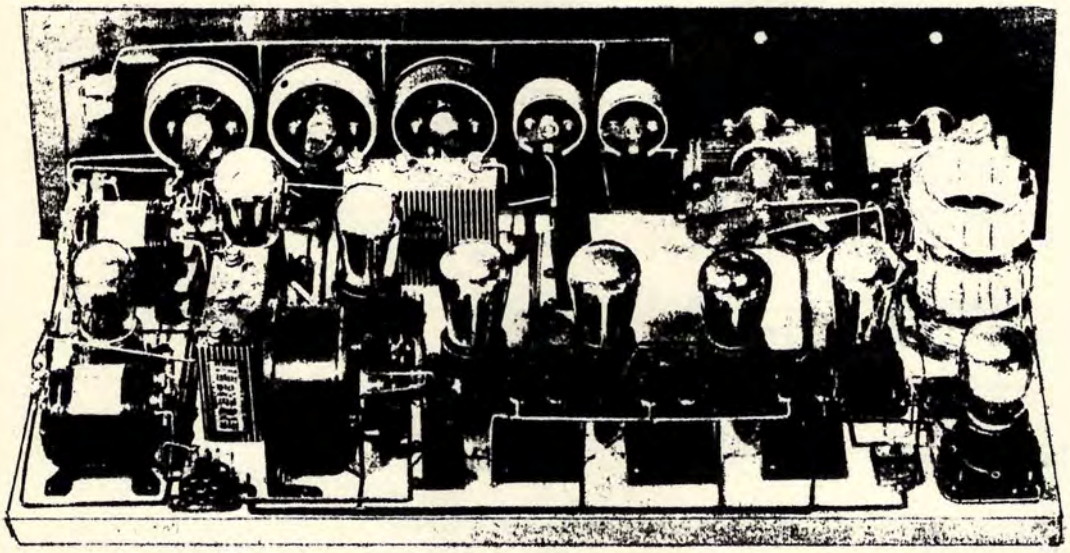

The super-het was frequently referred to in early media as the aristocrat of radio, and there were those who firmly believed it. Of all the early circuits which were constantly being picked at, with the hope of "improving" the basic circuit, none were picked at more diligently than the super-het circuitry. There were more "orphan" super-hets in the late Twenties than any other circuit, and you will find quite a few in these Sketch-Books - and all are worthwhile not only as a challenge to you, but the sheer adventure of putting together what appears to be primitive radio, and having it work. The super-het here depicted was by E. Clark, of Philadelphia, in collaboration with Neeley, publisher of Radio In The Home, also of Philadelphia. Comparable parts of later vintage may be substituted, but the results will probably startle you - the bloody things worked!

* * *
* *
*

(RH 12-25)

CLARK "SUPER-OCTETTE" SUPER-HET, 1925;2

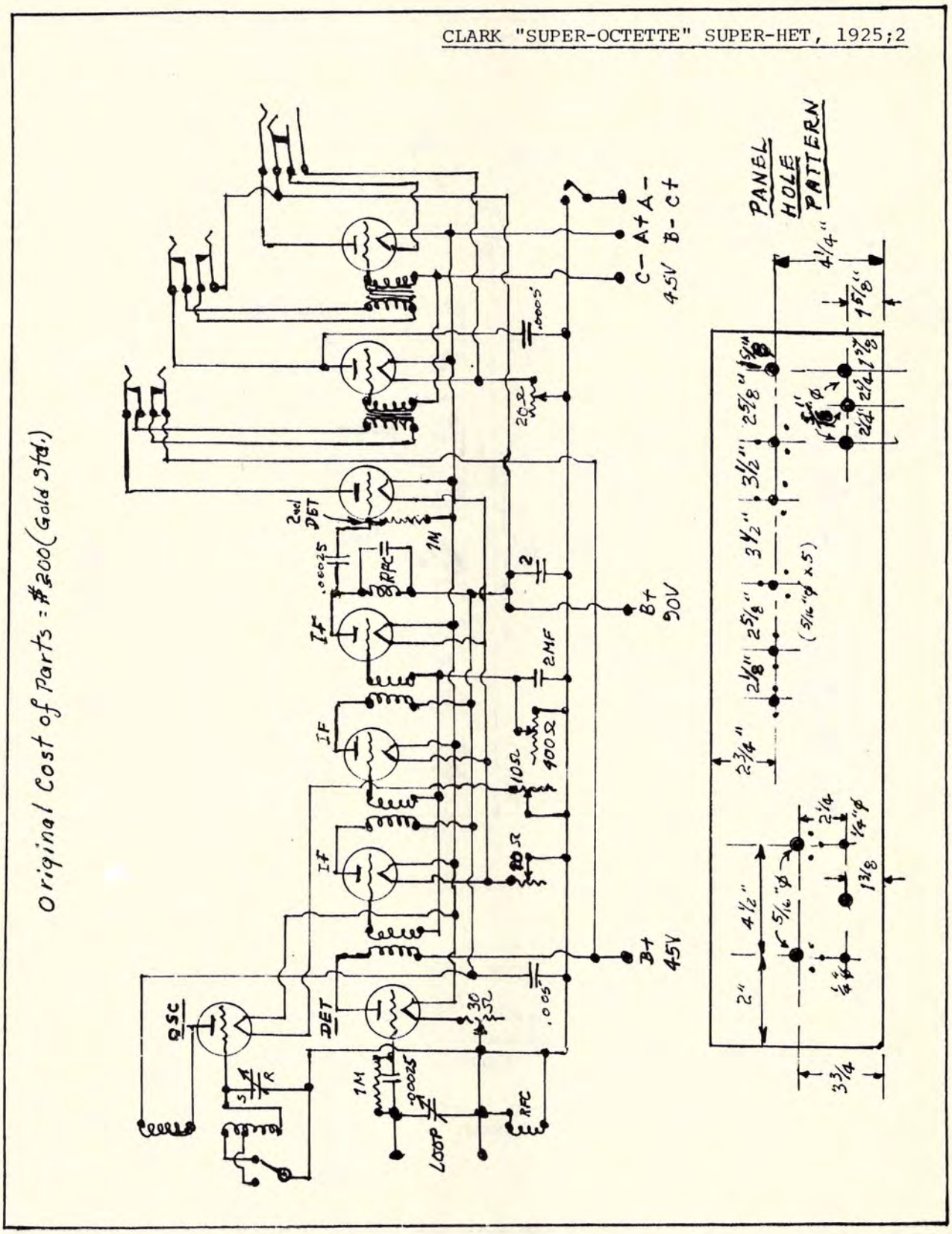

CLARK "SUPER-OCTEETE" SUPER-HET, 1925; 3

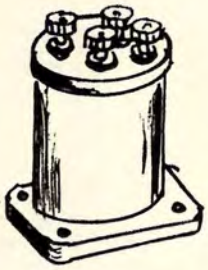

50 KC.
HETEROFORMERS
(3 Req. @ $7.50)

"SUPER-TONE"
RF FILTER
& CHOKE
($8)

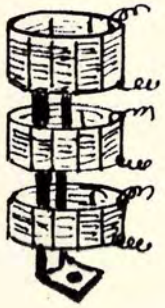

"SUPER-TONE"
COUPLER
(OSC.)
($5)

(3) HETEROFORMERS

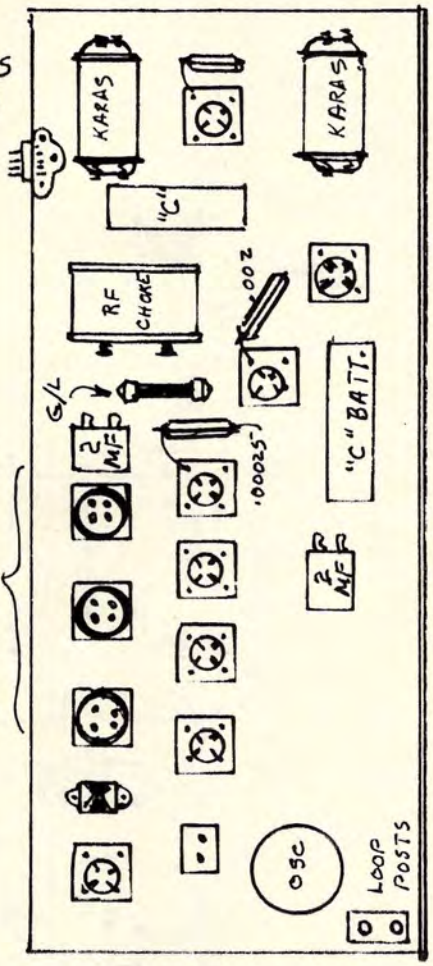

BASEBOARD LAYOUT

Panel = 7" x 26", Micarta, Mahogny Finish.
Baseboard = 11½" x 24½", Oak.
(2) G.R. Silver Dials.
(2) Double Circuit Jacks.
(2) Hammarlund .0005 Variables.
(2) Karas "Harmonik" AF Xfrmrs.
FIL Control Jack.
(2) .00025 MFD Condensers.
(1 ea.) .005; ,002; .0005 MFD.
FIL Switch.
(2) Phone Jacks.
(8) Benjamin Sockets.
(2) 20-ohm Resistors.
(1 ea.) 400-ohm; 30-ohm; 10-ohm.
(2) 2 MFD Condensers.

COCKADAY 8 TUBE SUPER-HET REFLEX
(1925) Sht. 1)

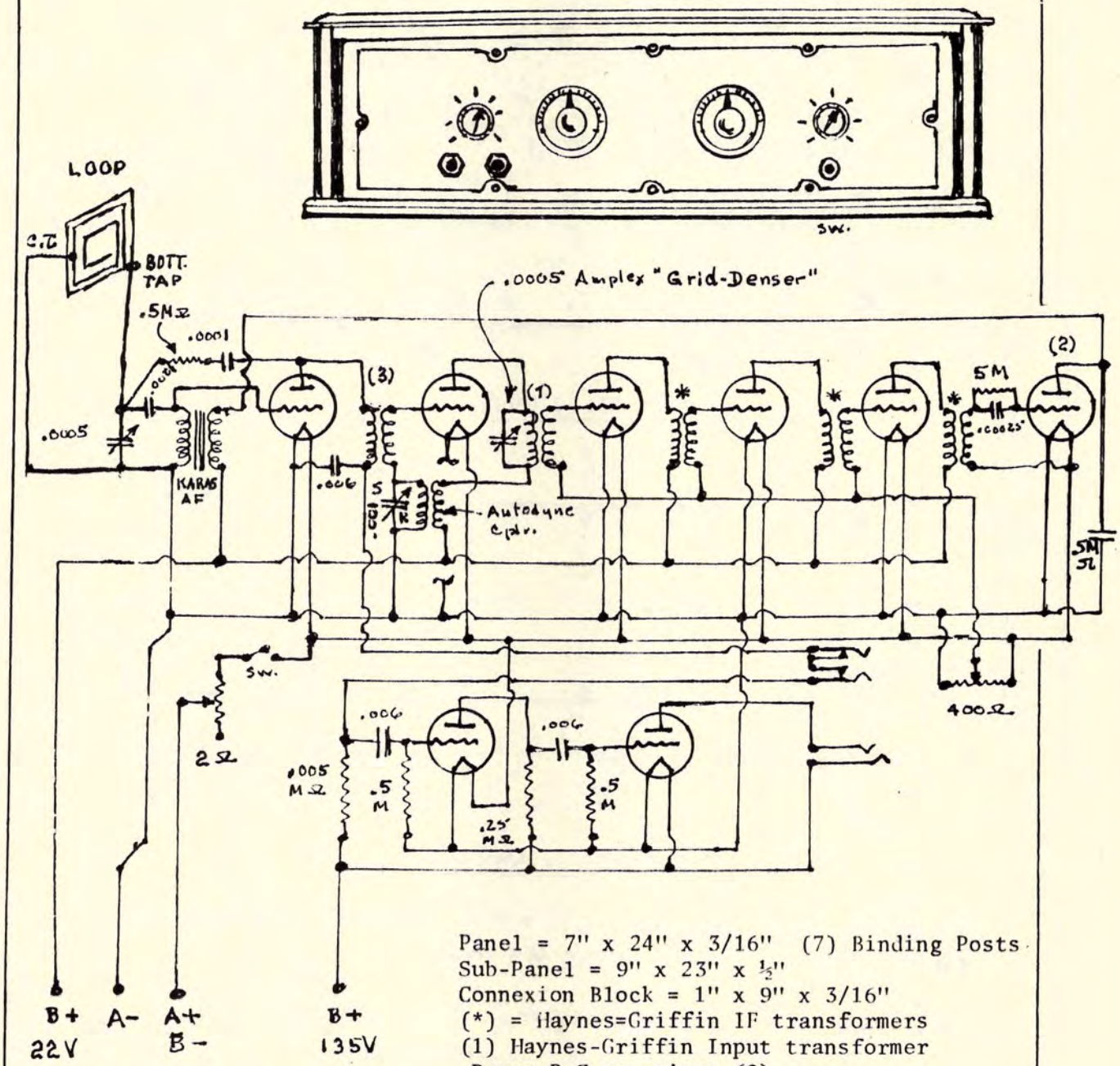

Panel = 7" x 24" x 3/16" (7) Binding Posts
Sub-Panel = 9" x 23" x ½"
Connexion Block = 1" x 9" x 3/16"
(*) = Haynes=Griffin IF transformers
(1) Haynes-Griffin Input transformer
Daven R-C mountings (2)
(2) Benjamin Cle-Ra-Tone sockets. All other sockets = Federal #16.
Walbert "A"-battery switch Pots. were Amsco
(3) "Duratran" RF transformers

(PR 1-28)

COCKADAY 8-TUBE SUPER-HET REFLEX
(1925) (Sht. 2)

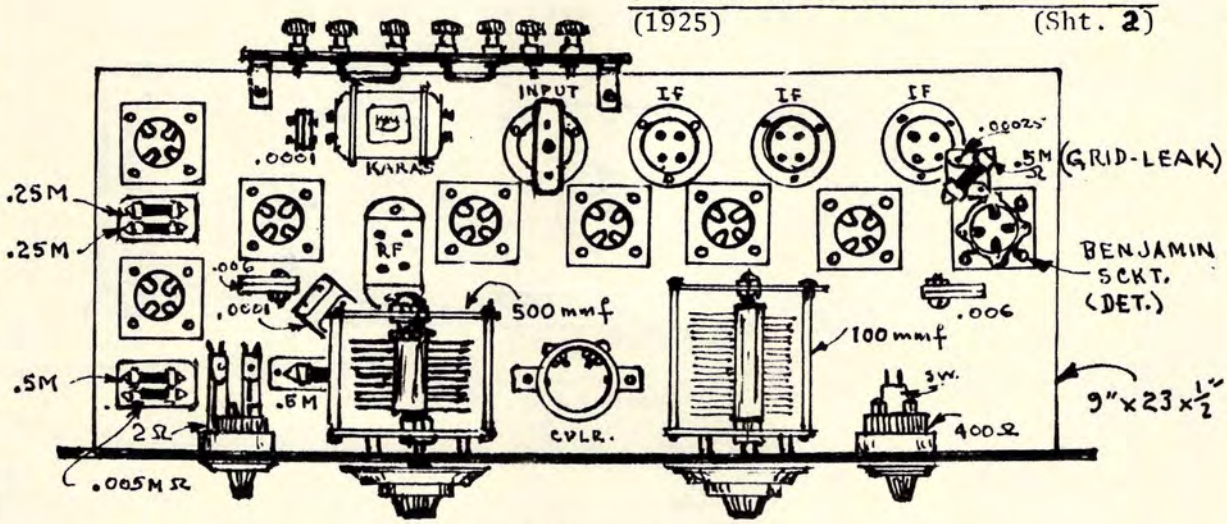

PLAN VIEW

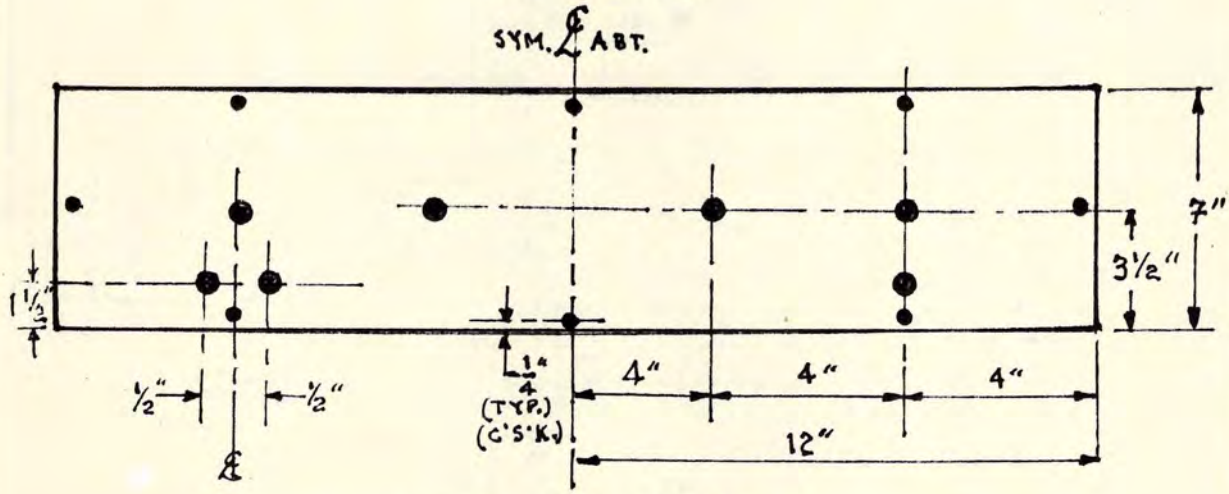

PANEL LAYOUT

Mounting holes not shown, to suit Variable Condensers & rheostat ~ potentiometer used.

For dimensions of component placement on baseboard, see PR.

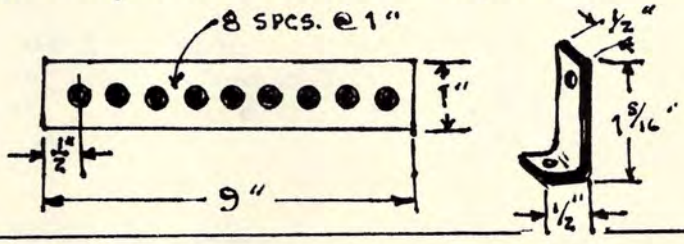

NOTES

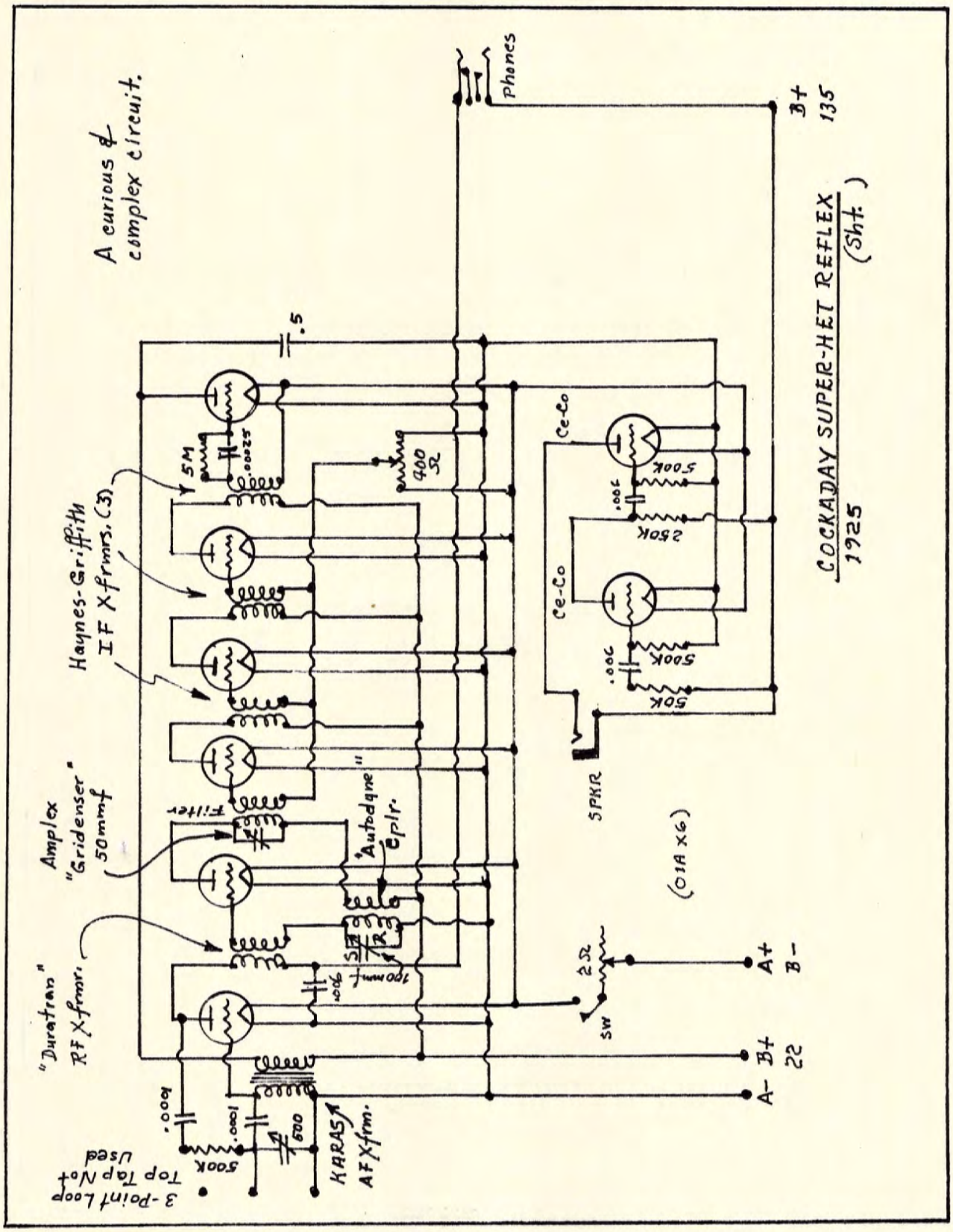
A curious & complex circuit.
Phones
B+ 135
COCKADAY SUPER-HET REFLEX
1925
(Sht.)
.5
5M
.00025
400 Ω
Haynes-Griffith IF Xfrmrs. (3)
Ce-Co
500K
.006
250K
Ce-Co
500K
.006
50K
SPKR
Amplex "Gridenser" 50mmf
Filter
"Autodyne" Eplr.
(01A x6)
"Duratran" RF Xfmr.
.006
100mmf
2Ω
SW
A+
B-
B+ 22
A-
.0001
500K
.0001
600
KARAS AF Xfrm.
3-Point Loop Top Tap Not Used

THE ORIGINAL CITIZEN's SUPER EIGHT, 1927; Sht. 1

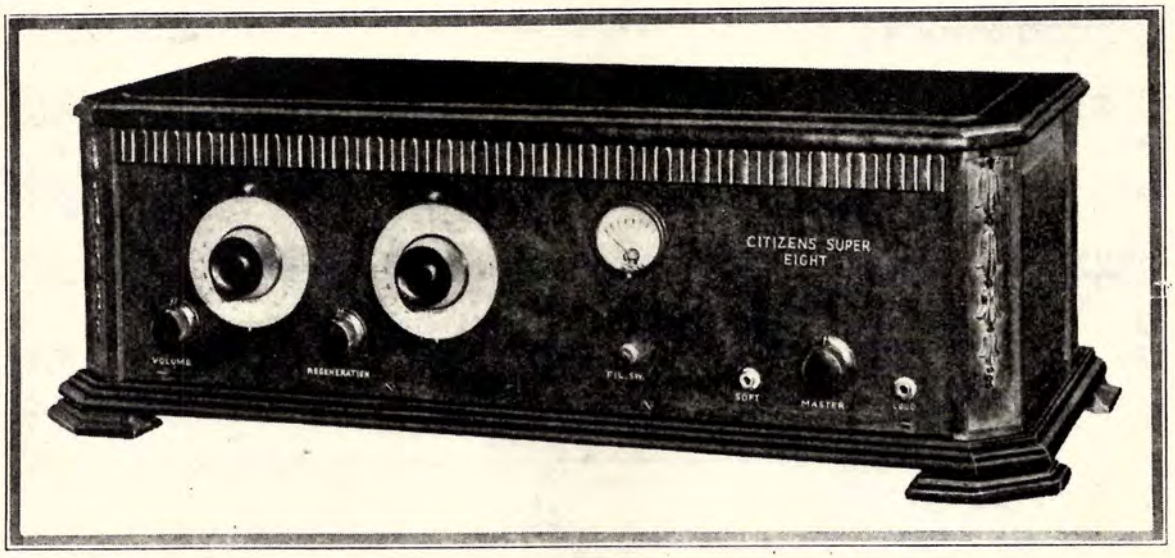

CITIZEN's CALL BOOK, like every other medium of the TWENTIES, was constantly constructing every new circuit that came along, and occasionally would offer the home-constructor one of their 'original' circuits. There were several Citizen's Super Eights, and this was the first. You might like to compare it with later versions.

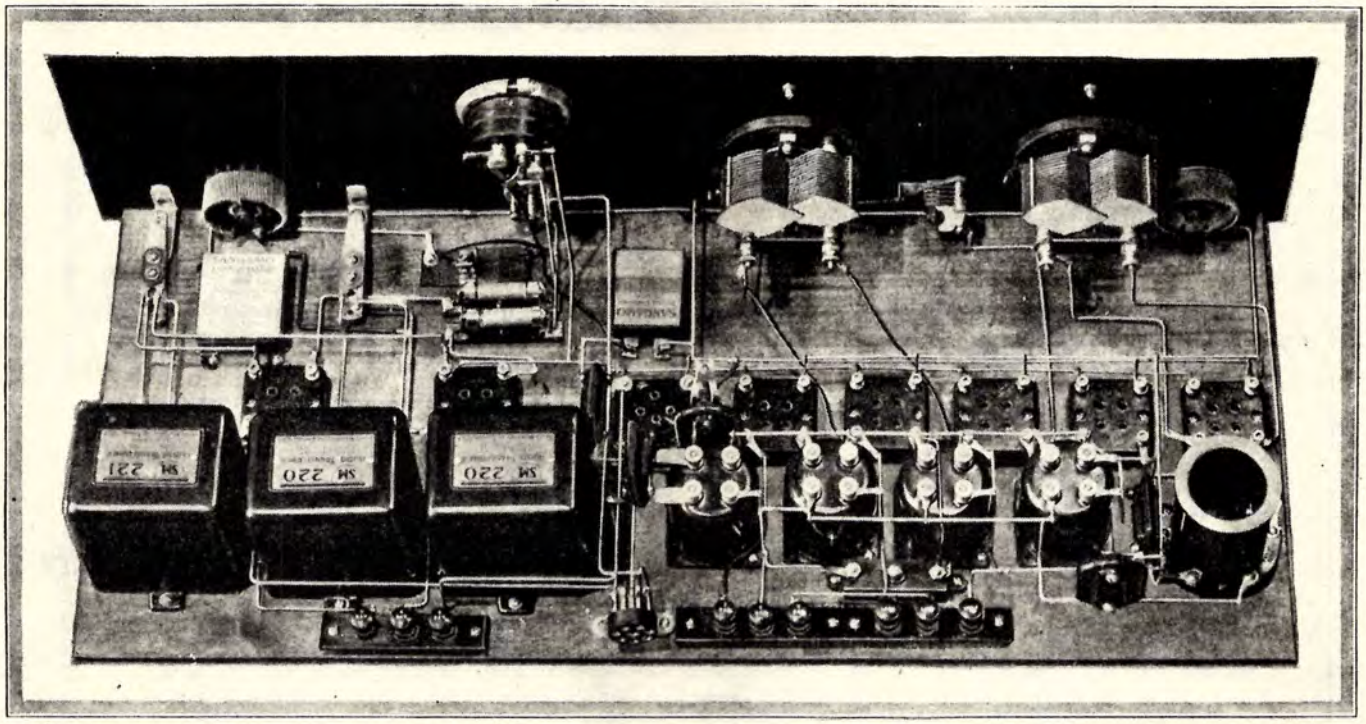

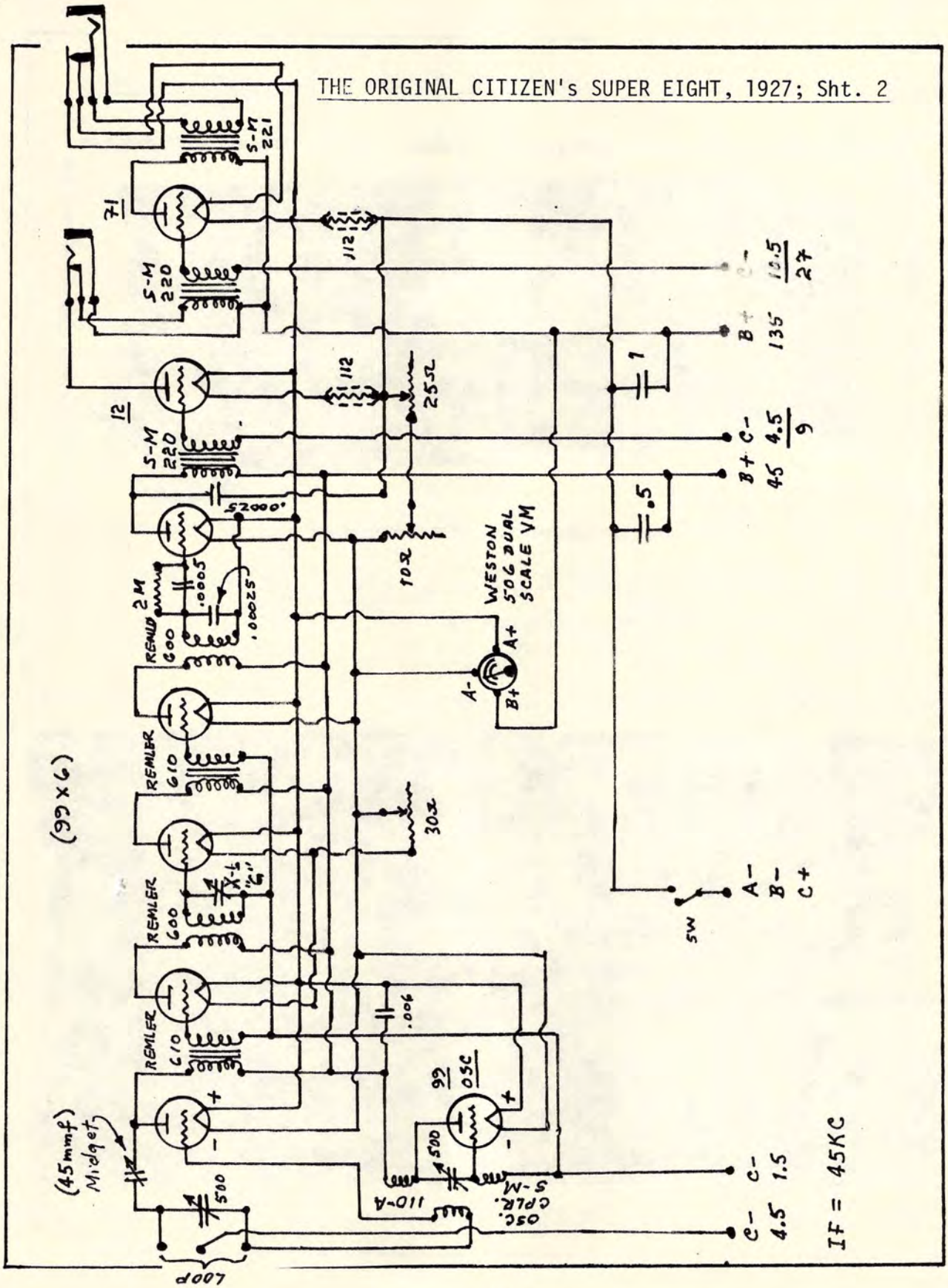
THE ORIGINAL CITIZEN's SUPER EIGHT, 1927; Sht. 2
(99 x 6)
71
12
S-M 221
S-M 220
S-M 220
112
112
25Ω
.002
2M
.0005
.00025
REMLER 600
REMLER 610
REMLER 600
REMLER 610
10Ω
30Ω
WESTON 506 DUAL SCALE VM
A+
A-
B+
.006
92 OSC
500
110-A
OSC. CPLR. S-M
(45mmf) Midget
500
LOOP
SW
A-
B-
C+
B+ 135
B+ C- 45
C- 4.5
C- 1.5
10.5/27
4.5/9
IF = 45KC

CITIZENS' 45KC SUPER-HET, 1927; Sht. 1

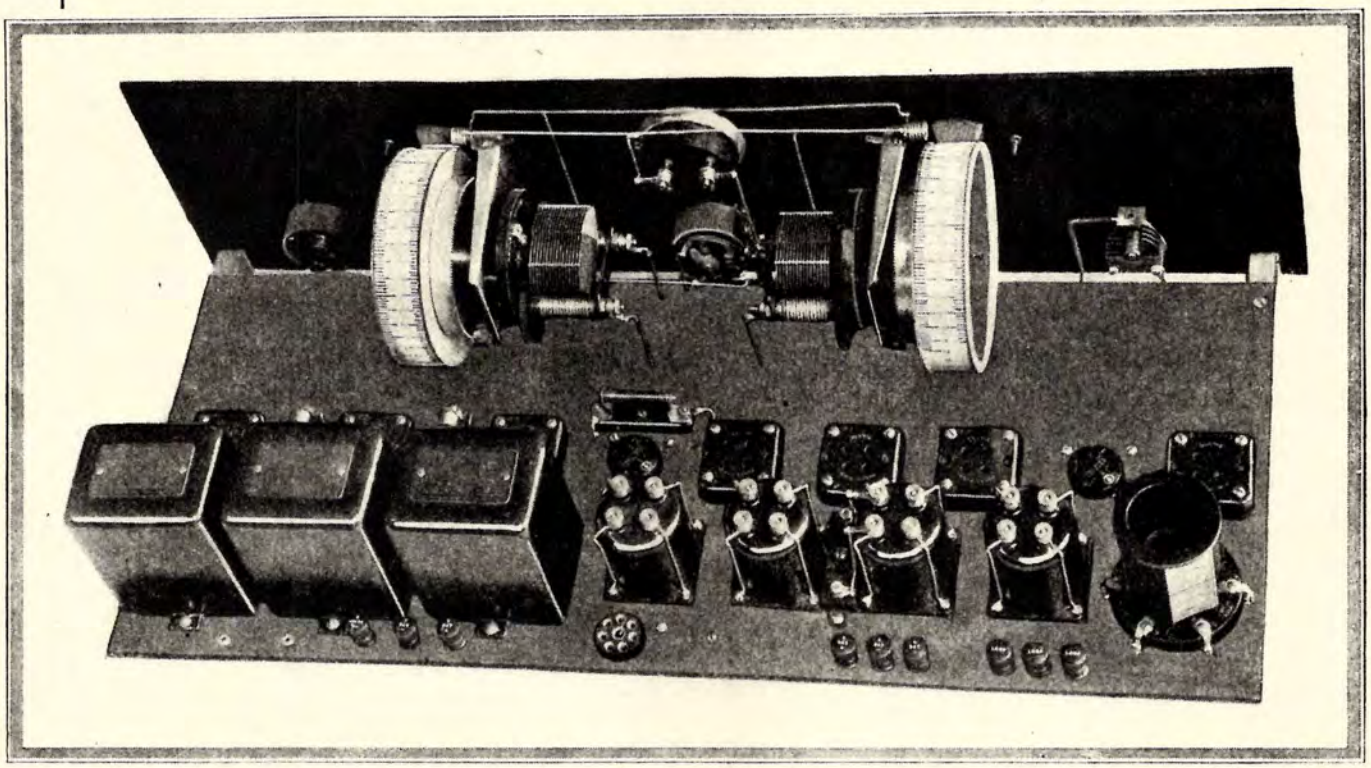

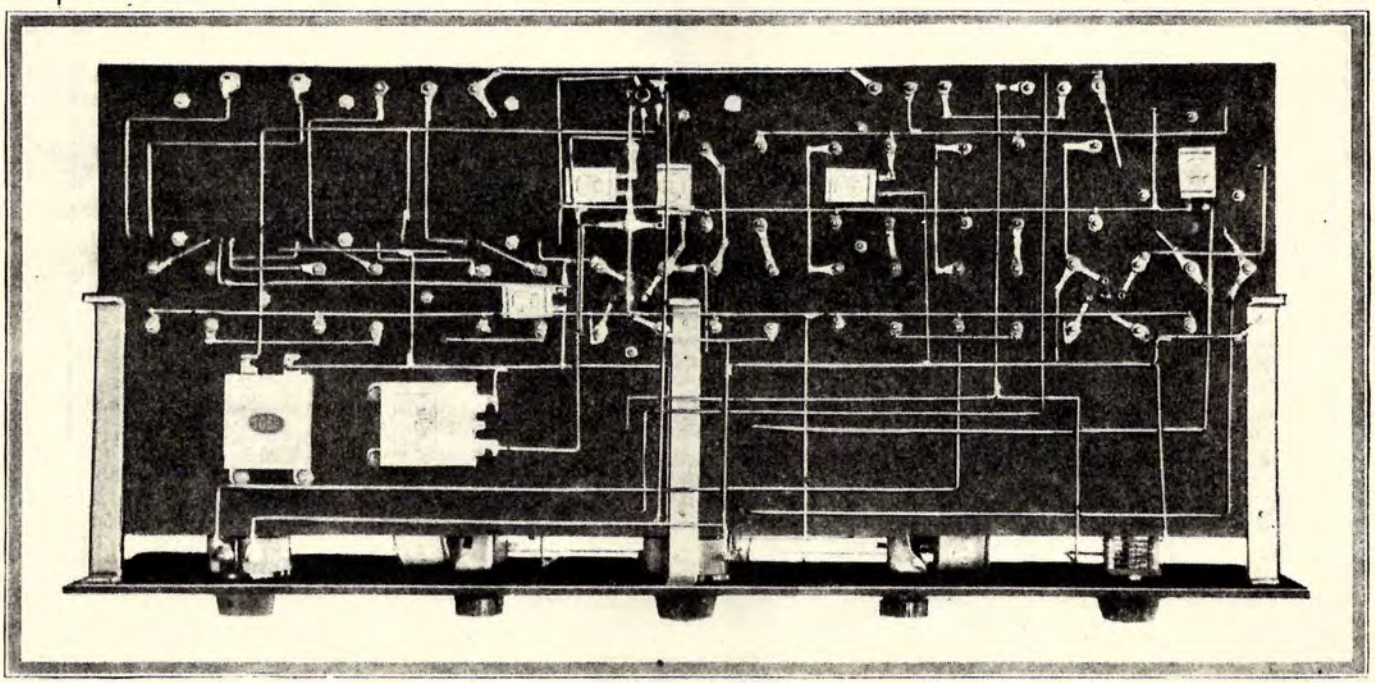

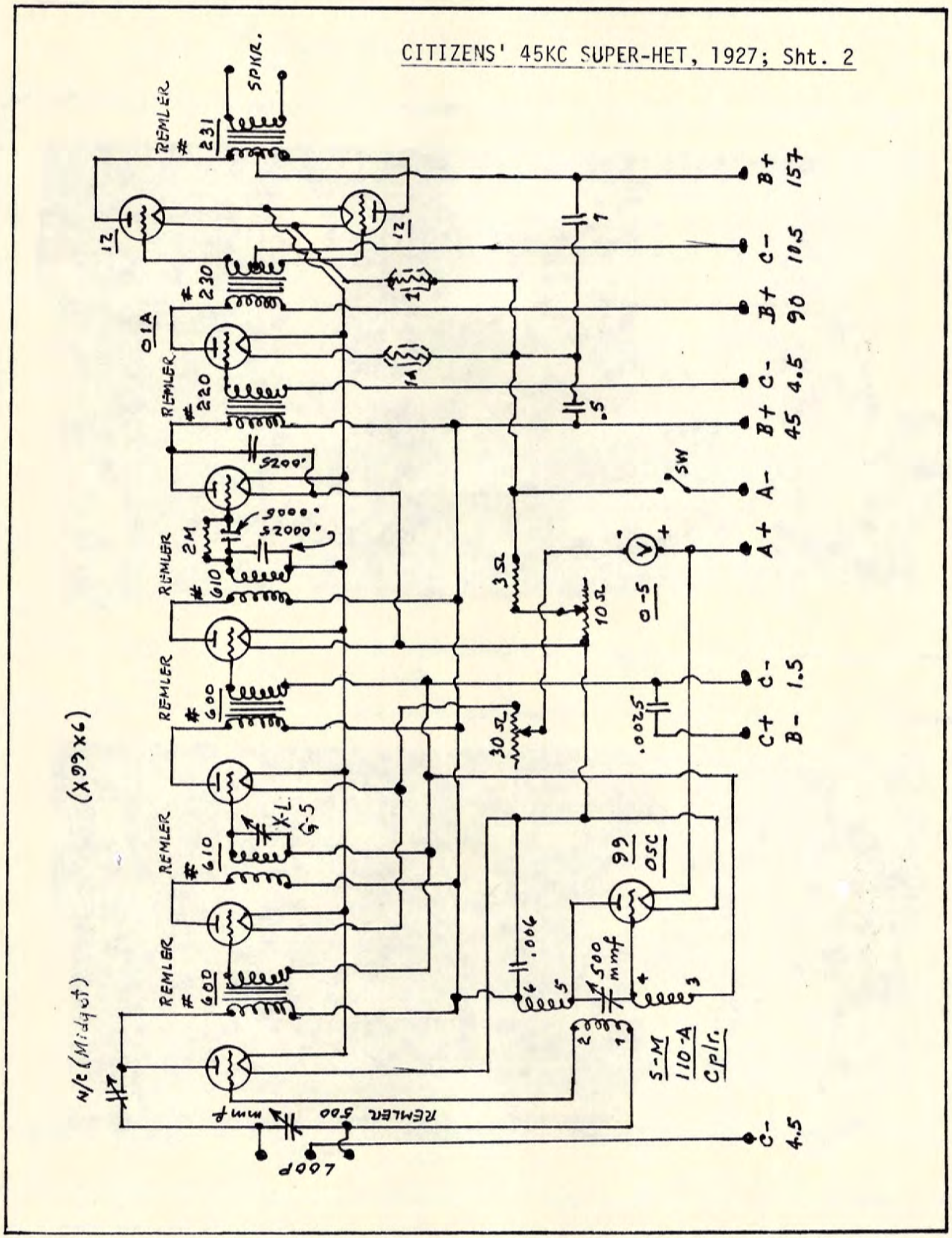
CITIZENS' 45KC SUPER-HET, 1927; Sht. 2
SPKR.
REMLER
#231
12
#230
01A
#220
5200'
9000'
52000'
2M
#610
#600
X-L
G-5
99
OSC
.006
500 mmf
S-M
110-A
Cplr.
LOOP
REMLER 500 mmf
3Ω
10Ω
30Ω
0-5
.0025
SW
B+ 157
C- 105
B+ 90
C- 4.5
B+ 45
A-
A+
C-
C+ B- 1.5
C- 4.5
(X99X6)
w/c (Midget)

CITIZENS' 45KC SUPER-HET, 1927; Sht. 3

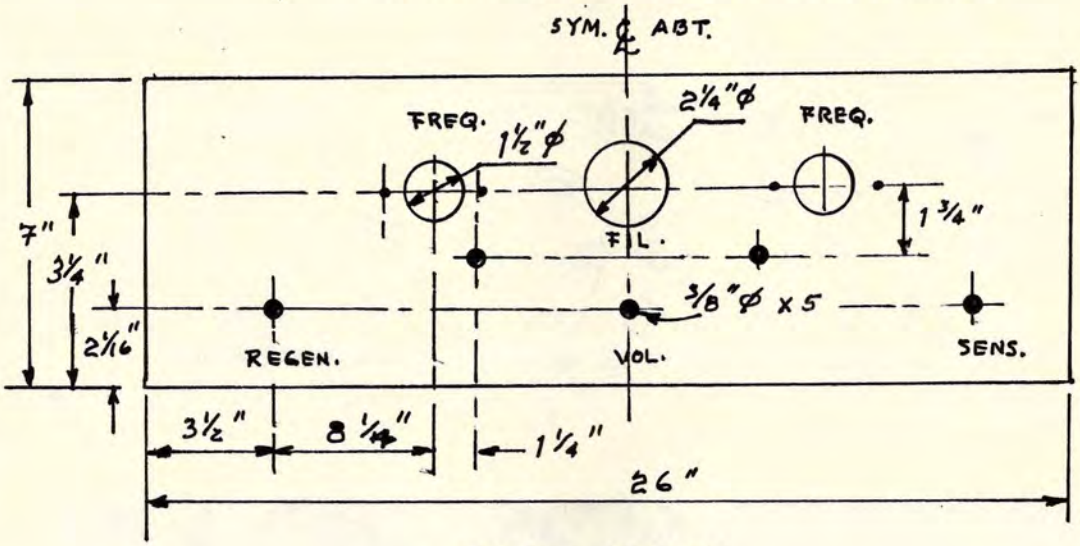

PANEL LAYOUT

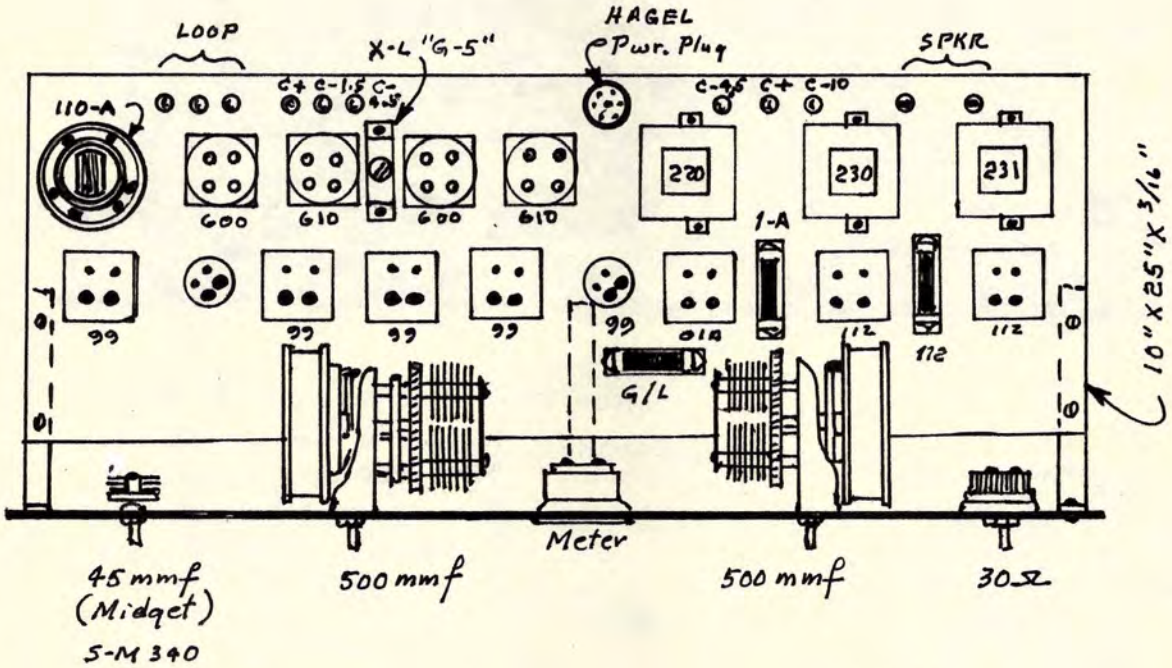

GENERAL LAYOUT, SUB-PANEL

FROST SOCKETS № 531 (7)
BENJAMIN SOCKETS № 9044.
WESTON № 506 VOLTMETER.
KARAS SUB-PANEL BRACKETS (3)

HAGEL POWER PLUG, 7 pt.
TOBE FIXED CONDENSERS.
FROST RHEOSTAT w/SWITCH.
S-M 110-A OSC. COUPLER

CAMFIELD SUPER-9 SUPER-HET, 1927; SH. 1

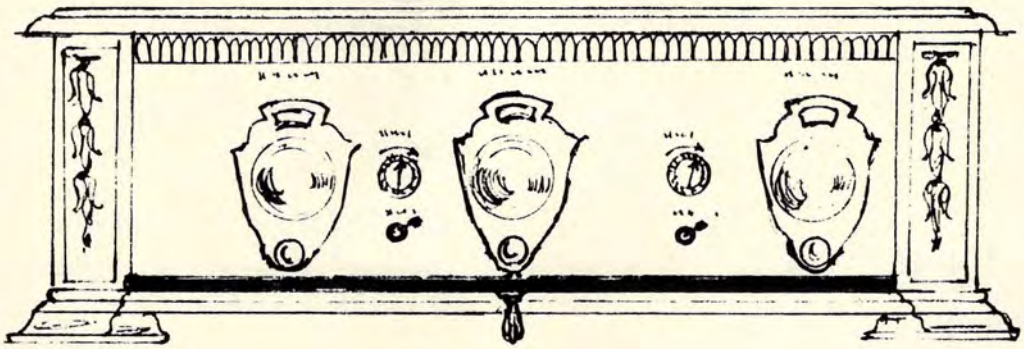

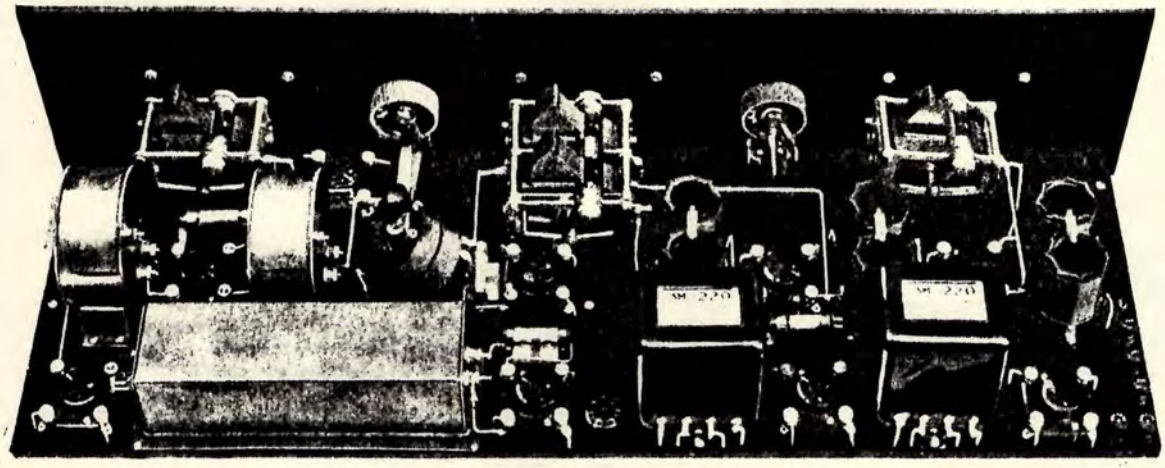

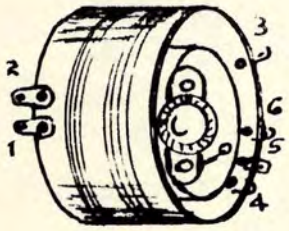

OSC. COIL
(#620 REMLER)
(CAMFIELD Same)

$117.40 KIT
(CE·3·27)

PANEL = 7"x30". BASE = 10"X29"x 3/16"

CAMFIELD #251 250 mmf VARIABLE.
" #351 350 mmf " .
" #352 350 mmf " .
" #22K KIT (3 "Duoformers").
REMLER #620 CPLNG. UNIT.
RUSCO 10KC BAND-PASS FILTER.
" 95KC IF XFRMRS. (2).

S-M #220 AF XFRMRS. (2).
K-K #592 DIALS (3).
KARAS SUB-PANEL BRKTS. (3)
JONES P.M. SUB-PANEL PLUG.
4-A AMPERITE (2).

CAMFIELD SUPER-9 SUPER-HET, 1927; Sht.2

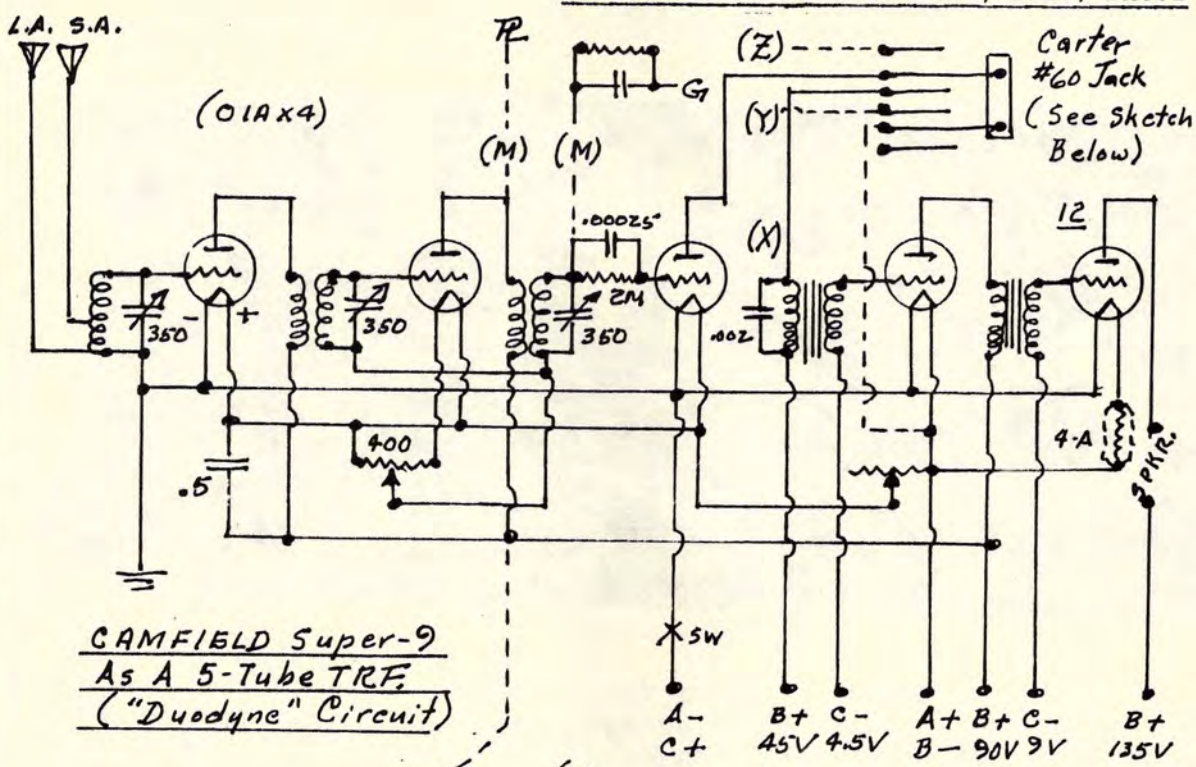

CAMFIELD Super-9
As A 5-Tube TRF
("Duodyne" Circuit)

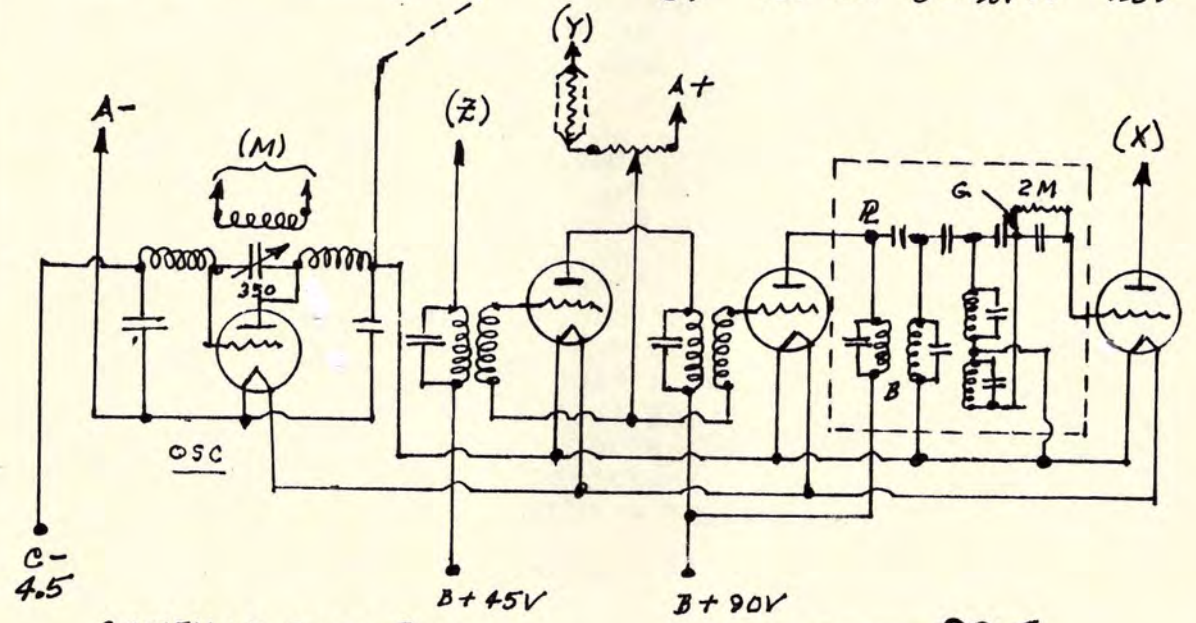

CAMFIELD Super-9
9-Tube Super-Het
(Circuitry added to 5-Tube TRF circuitry.)

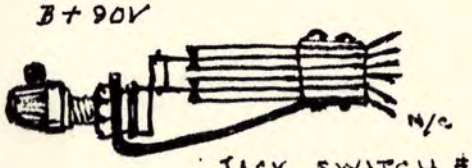

JACK SWITCH #60

CAMFIELD "SUPER SELECTIVE 6-10", 1927; Sht. 1

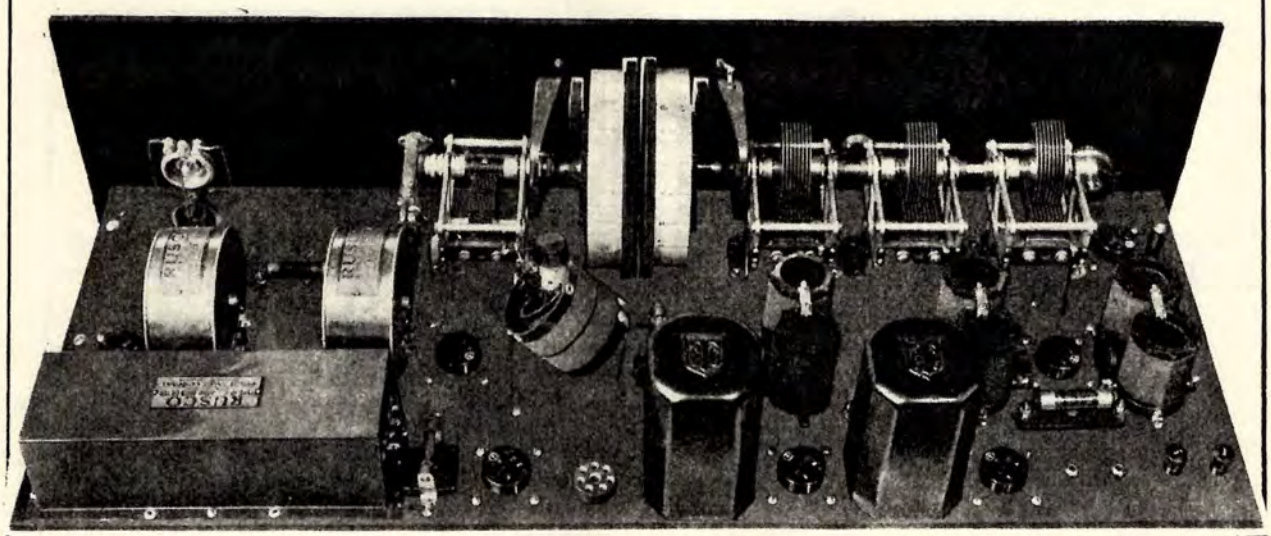

Like Bremer-Tully and Magnaformer, to name two other manufacturers who offered the home-constructor what were essentially two receivers in one, Camfield Manufacturing Co. of Chicago offered a choice of either a 6-tube TRF, or a 10 tube super-het, both on the same chassis. Selexion was by the flip of a switch on the panel.

Another advantage was simply that the home-constructor of limited means could build the TRF sexion first, and later add the rest of the circuit. Also like other component manufacturers who flirted with producing their own radios, parts not made by Camfield were utilised, such as Tyrman, Rasco, Carter, Karas, et al., all products of good quality.

The incorporation of a band-pass filter, while neither new nor novel, is interesting in that it was offered by Rusco, a large and aggressive mail-order house for radio parts. In the cut above, Rasco AF transformers are shown, but in the final version, Tyrman audios were specified.

The 2K pot. in the ANT connects to the grid of the first RF tube. Inasmuch as the grid circuit is aperiodic, it is not necessary to tune this grid circuit; thus, the pot. can be used as a volume control or what Camfield called a Sensitivity governor. In all, a neat little set.

CAMFIELD "SUPER SELECTIVE 6-10", 1927; Sht. 2

Major Parts List:

Camfield 250 mmf Variable #251.
" 350 mmf Variable #352 (2).
" #620 Oscillator Coil.
" #44 'Duoformer' Binocular Coils (3).
" Support Brackets & Shaft for Variables.
Rusco #10 KC Band-Pass Filter.
" #95 KC IF Transformers (2).
Tyrman #330 AF Transformers (2).
" Vernier Drum-Dial.
Amperite 4-A (2).
" 3-A.
Benjamin #9044 Sockets (10).
Karas Sub-Panel Brackets (3).

Panel = "Celeron" 7" x 30".
Sub-Panel = "Celeron" 10" x 29".

* * *

CAMFIELD "SUPER-SELECTIVE 6-10", 1928; Sht.3

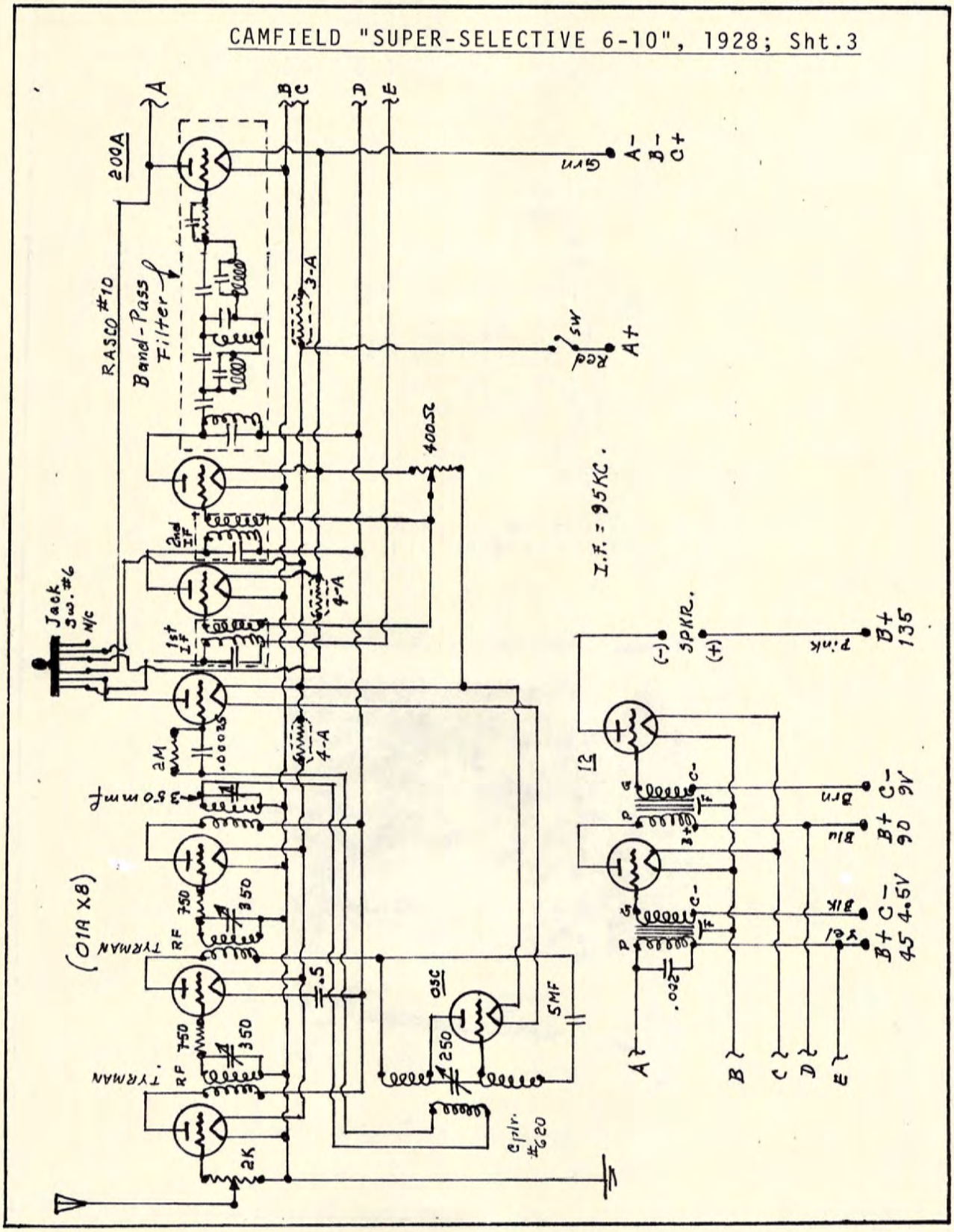

CELCO "D"-COIL SUPER-HET, 1925; Sht. 1

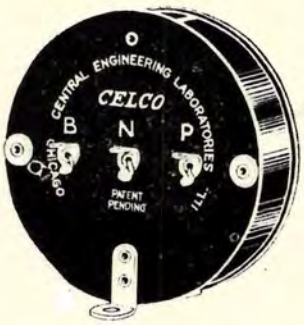

Probably the most ambitious effort to make the "D"-coil respectable was mounted by a Harry J. Marx - a consulting radio engineer of Chicago, and who was probably the finest of all draftsmen drawing schematics for radio media of the Twenties.

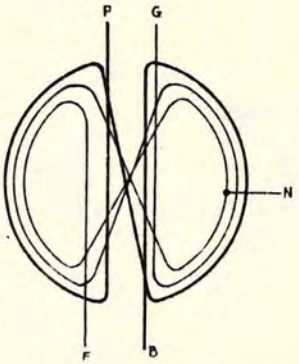

"Celco" was the trade-name of the Central Engineering Laboratories of Chicago, and Marx designed the circuit shown here for them. The theory of the "D"-coil and its subsequent controversy is detailed in Volume VII, q.v.

Each transformer encased in an aluminum can was set to peak at 32 KC, which was an odd IF frequency. The SEC of each coil was tapt at the point designated "N" on the sketch. This was to allow the adding of neutralising condensers, if the home-constructor so desired. They were supposed to allow better control of plate-grid capacity feed-back.

The OSC coil was of the standard type, with a slightly different hook-up. Parts not designated on the schematic were as follows:

Panel = 7" x 18".
500 mmf Variables (2).
45 mmf Midget Variable (Regeneration Control).
Celco Oscillator Coupler.
Celco Filter Coupler, 32 KC.
Celco "D"-Coil Transformers (3).
Power Rheostat (Clarostat) 7 ohms.
Potentiometer 200 ohms.
Amperite 1-A.
Tubular Grid-Leak 5 M-ohms.
Benjamin 7-Gang Socket Shelf.
Rauland "Lyric" AF Transformer.
Coil Panel = 2" x 17", & Brackets.
Vernier Dials 4" Ø.
100' Buss-Bar Wire, tinned.

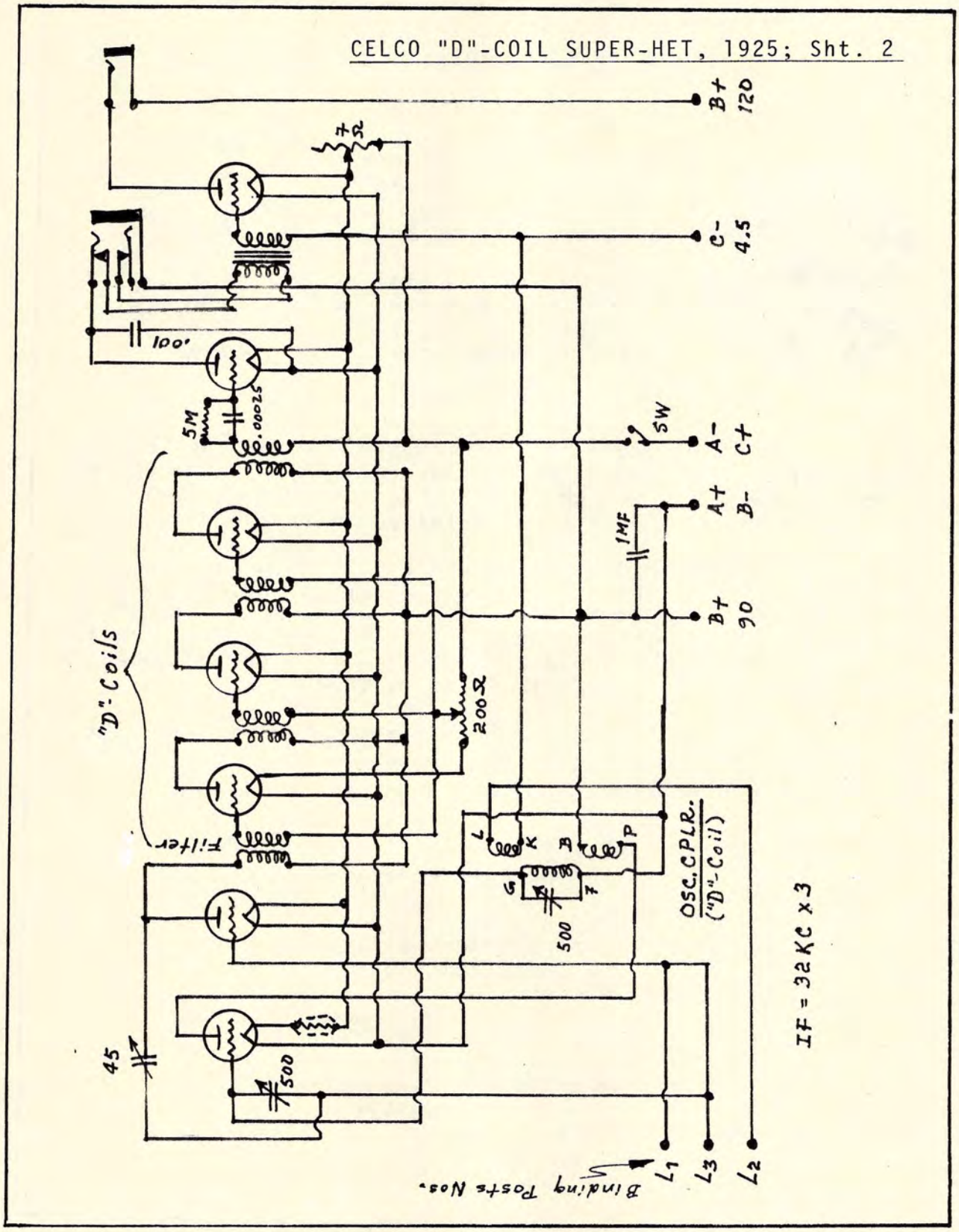
CELCO "D"-COIL SUPER-HET, 1925; Sht. 2
B+ 120
C- 4.5
A- C+
A+ B-
B+ 90
SW
1MF
7Ω
.001
5M
.00025
"D" Coils
Filter
200Ω
500
45
500
OSC. CPLR. ("D"-Coil)
L K B P
G F
IF = 32 KC x 3
L1 L3 L2
Binding Posts Nos.

CELCO "D"-COIL SUPER-HET, 1925; Sht. 3

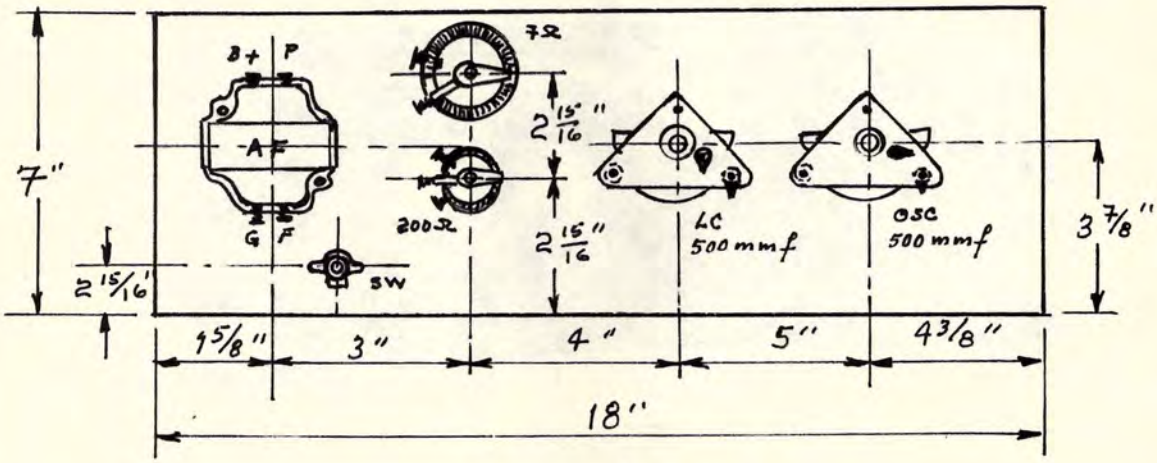

BACK of PANEL
(w/ Coil Mounting Panel Removed for Clarity.)

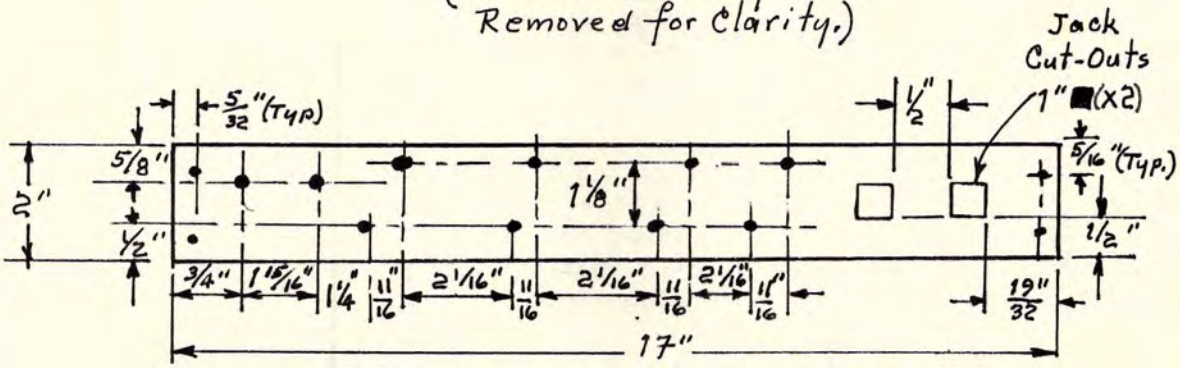

COIL MOUNTING PANEL

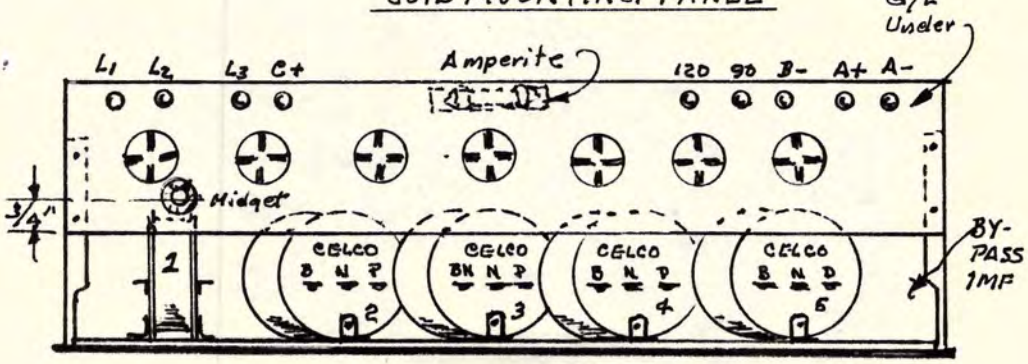

PLAN VIEW
(Panel Controls Removed for Clarity.)

THE CALLIES SUPER-HET of 1926; Sht. 1

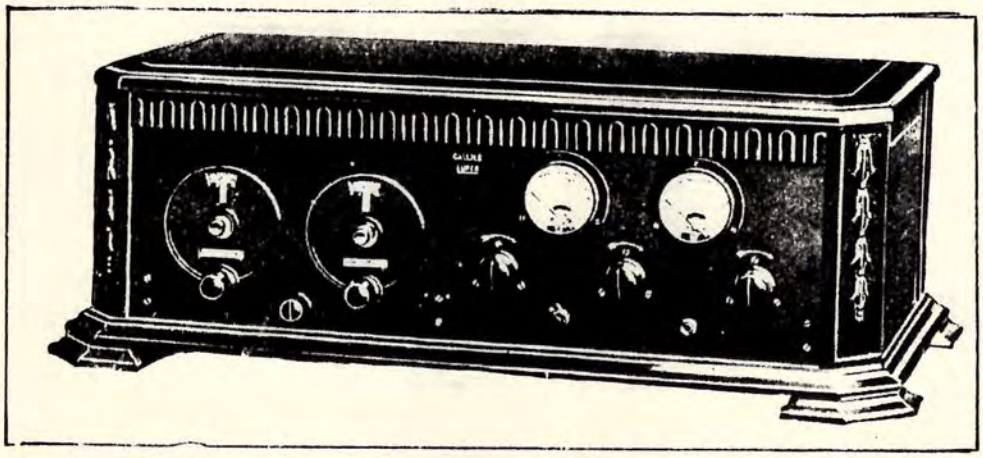

During the mid-Twenties there was a veritable niagara of super-het circuits offered the home-constructor through his radio media, some good, some different simply for the sake of being different. The super-het depicted here was one of the simplest to construct, and the results were quite satisfactory. In fact, it offered a remarkable tonal range for the time. If you've ever played with the notion of having a go at constructing one of the early super-hets, this one would be a good one to start with. It enjoyed a good popularity for about three years. Like all circuitry of the period. comparable parts may be substituted for those specified, although it naturally follows that original parts would be best. Refer to Sheet 2 for the conventional schematic.

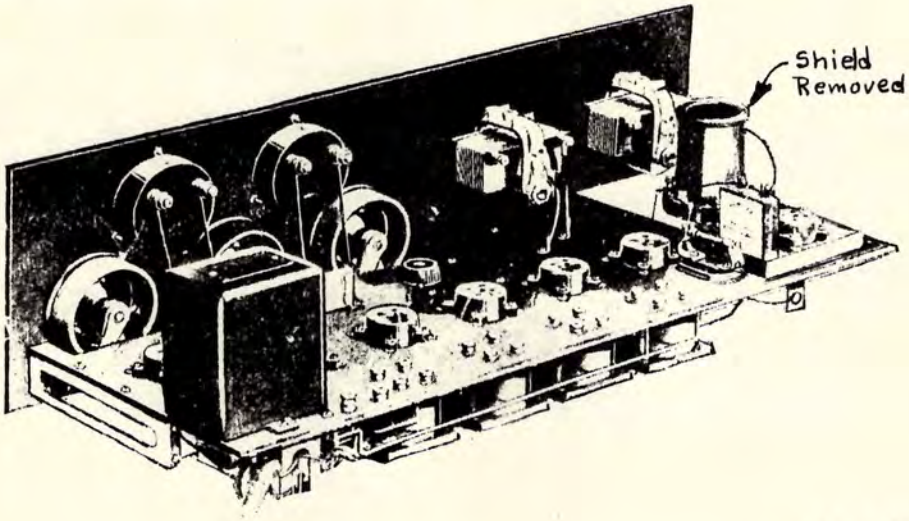

(CB F-26)

CALLIES SUPER-HET, 1926; Sht. 2

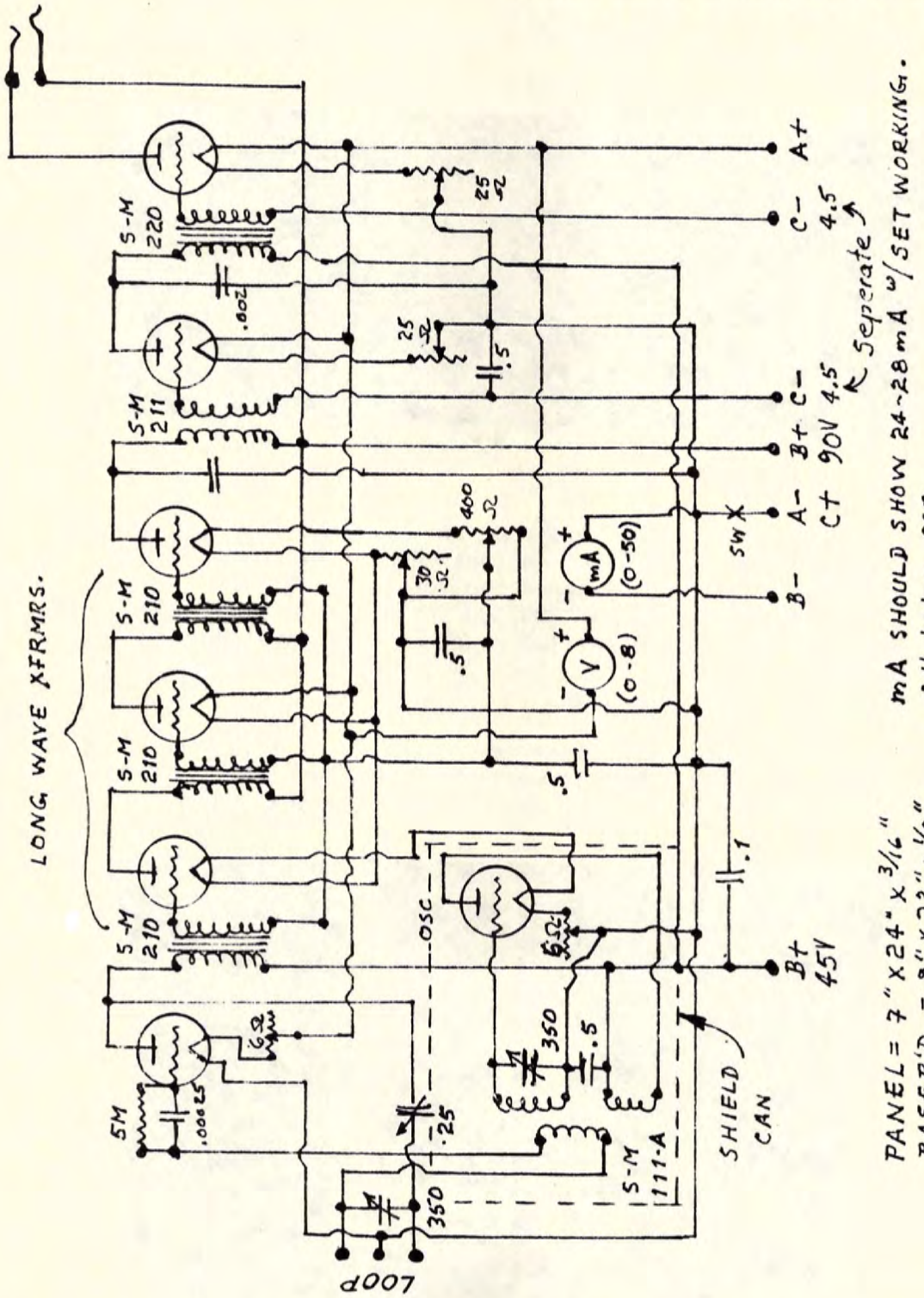

CLOUGH 54KC SUPER-HET, 1926; Sht. 1

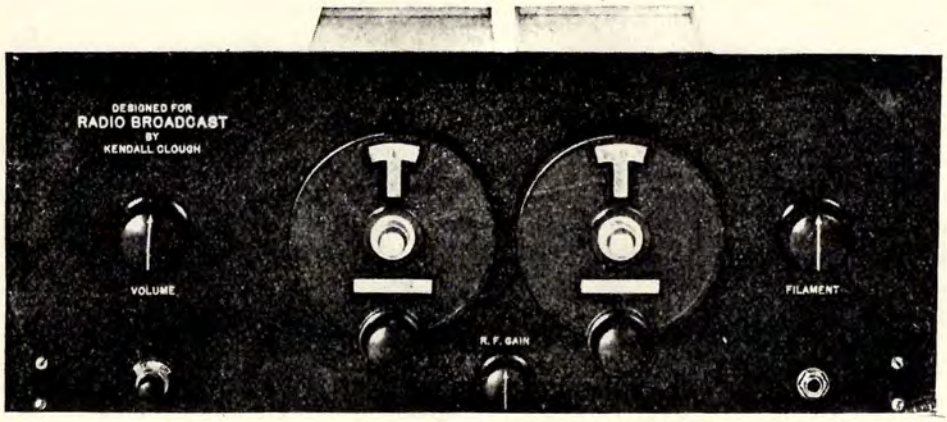

If this receiver reminds you strongly of Silver-Marshall sets, that is not surprising, in that Kendall Clough was Chief Engineer for Silver, he designed the very popular audio, power, and filter chokes of the S-M 200/300 series, and wrote rather fulsomely in radio media. He later set-up and was Director of the Research Labs of Chicago, Inc., a few blocks from where Silver-Marshall was operating.

His specifying S-M components was natural, aside from the fact that they did work quite well. The receiver detailed here had an interesting oscillator harmonic control adjustment.

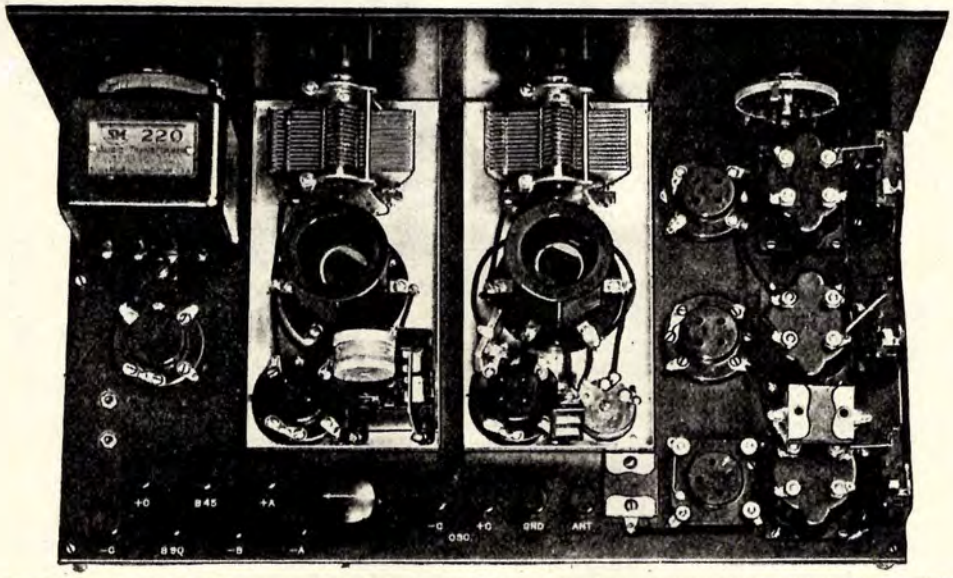

CLOUGH 54KC SUPER-HET, 1926; Sht. 2

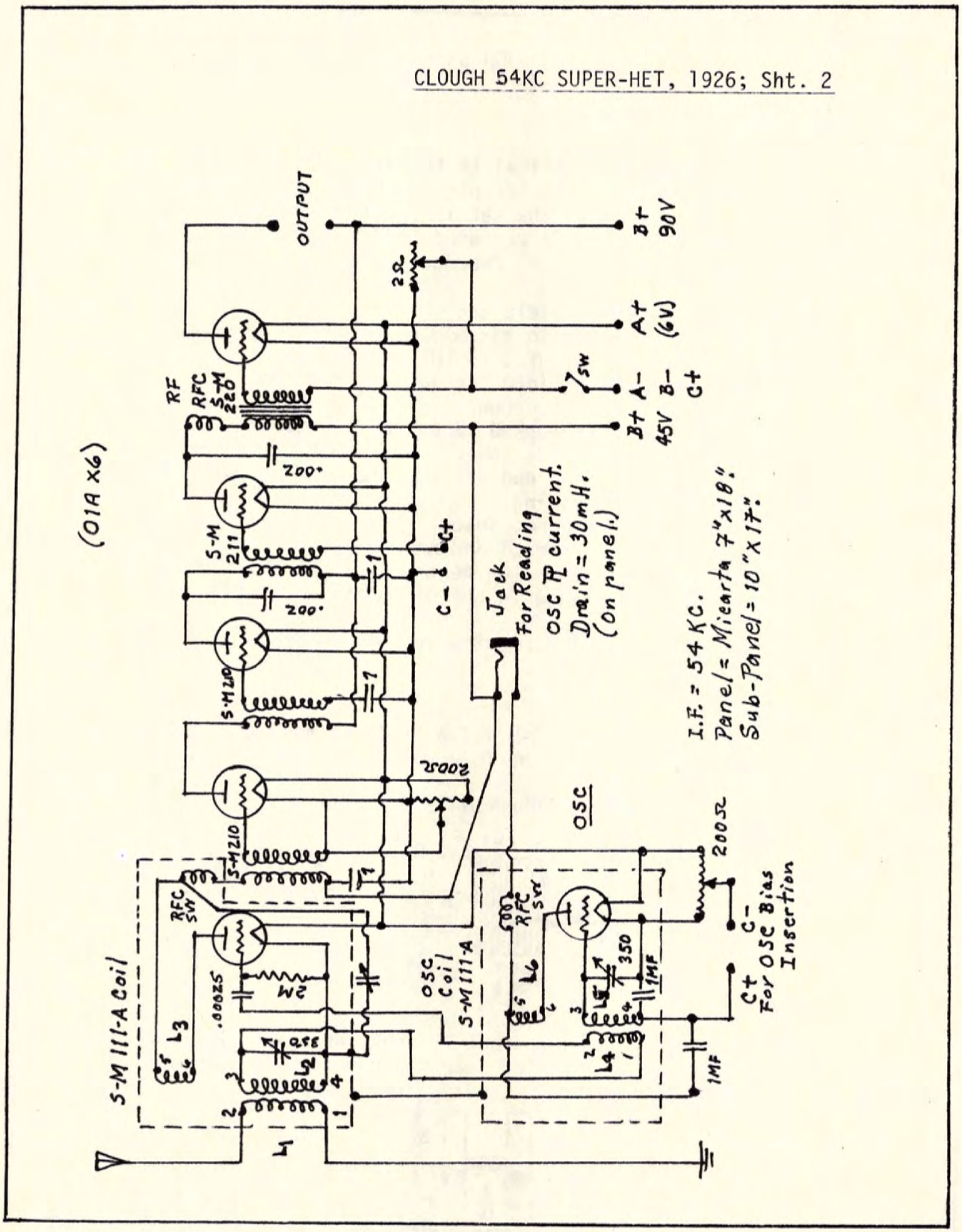

CLOUGH 54 KC SUPER-HET, 1926; Sht. 3

Harmonic Control Adjustment:

This adjustment was critical to the over-all efficiency of the set, and the proper oscillator plate current was important. The adjustment is made after the set is complete and working. The binding posts marker C- and C+ are used for the insertion of a positive bias on the oscillator. Proceed as follows:

1. Remove top of OSC shield can.
2. Rotate the variable to maximum capacity.
3. Insert a trial bias of 8 to 10V to the binding posts.
4. Insert a 25mA meter into the jack on the panel.
5. Note the oscillator current.
6. Short the OSC coil marked L3 on the schematic.
7. If plate current reads lower, rotate potentiometer towards the positive end until plate current is equal to the original reading.
8. If this cannot be done, insert more C-bias voltage.
9. Remove the short from L3 and note plate current.
10. A number of trials may be necessary until the shorted coil causes no change in the OSC plate current.

When properly adjusted, all harmonics are eliminated.

* * *

If you do not have the S-M 111-A coils at hand and you are capable of winding your own, the following data are to be used:

The ANT and OSC coil are the same.

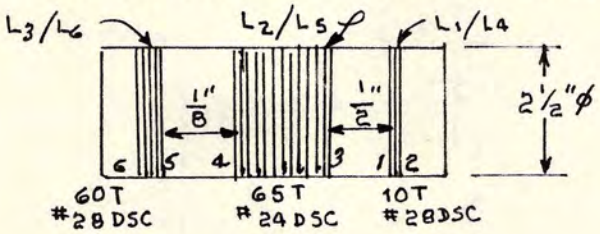

L1 to slide over form - this is to vary coupling.

Two short-wave chokes and one RF choke are required, with the SW spool having 400 turns of #36DSC wire, the RF spool taking 750 turns of #36 DSC wire.

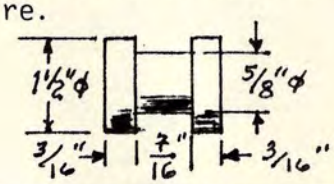

EIGHT-IN-LINE

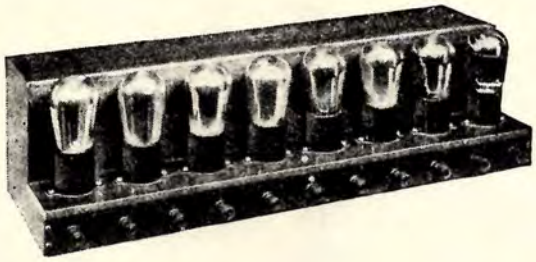

H*F*L (High Frequency Labs) of Chicago offered the home-constructor quality products and interesting monoblock construction units. There was a Six-In-Line, Eight-In-Line, Nine-In-Line, all basically the same circuit. There was a 10-tube screen-grid offering in 1929, but it was not part of the in-line series.

The Eight-In-Line has been selected here as being representative of what H*F*L had to offer. In their consistent advertising, they were not above the usual pufferisms, and even the employment of slang expressions then in vogue - for example: *"Built like a Mack truck!"* But what first drew my attention to the H*F*L adverts was a rather fascinating opening statement in an early Call Book ad:

> *"This is the brain-child of two of the greatest designing radio engineers in the world.....!"*

In itself it was really no more than the highblown hyperbole used by all Radio manufacturers, and many were constantly claiming that their receivers or kits had been designed by world-famous engineers, famous radio-engineers, recognized by every radio-engineer, etc., etc. The point tacitly made by H*F*L's "brain-child" parents was that never had any advert boasting famous engineers ever named those "world-famous radio-engineers". Somehow, I expected H*F*L to be different.

They exploited the new screen-grid tube in all their circuits. Each stage of their S.G. amplifier could be tuned by the operator to suit either conditions of reception, or his own taste. The "Mastertone" receiver kit by H*F*L could also be of interest to you. You will also find at the end of this sexion the last "Special" power amplifier offered by H*F*L. While designed for their "Special 9", it is easily adaptable to any early receiver you may have at hand.

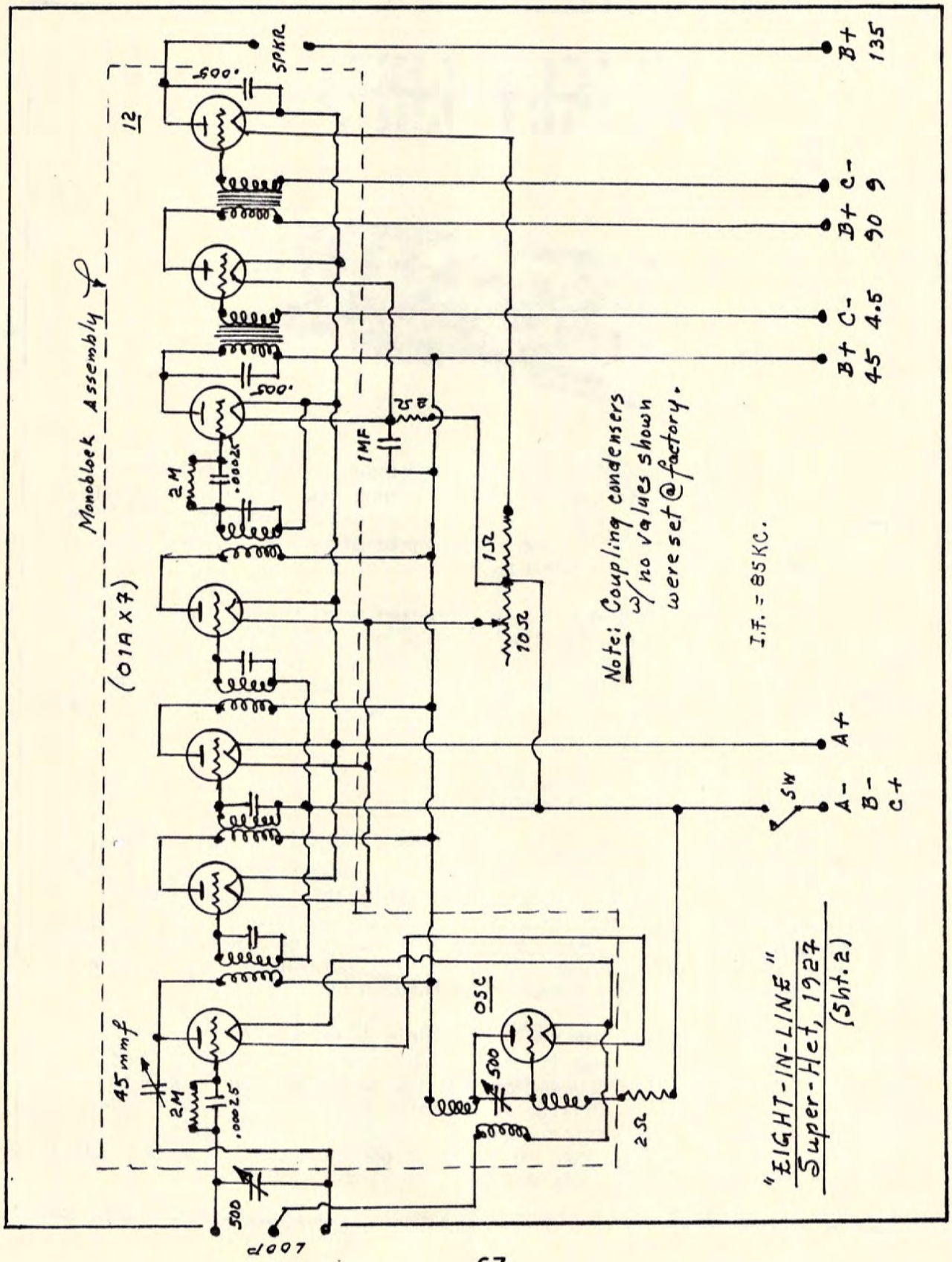
Monoblock Assembly
(01A x 7)
12
SPKR
.005
.005
2M
.00025
1MF
25Ω
1Ω
10Ω
Note: Coupling condensers w/no values shown were set @ factory.
I.F. = 85KC.
45 mmf
2M
.00025
500
LOOP
OSC
500
2Ω
SW
A+
A-
B-
C+
B+ 135
B+ C- 90 9
B+ C- 45 4.5
"EIGHT-IN-LINE"
Super-Het, 1927
(Sht. 2)

H*F*L "SPECIAL 9" POWER AMPLIFIER, 1929

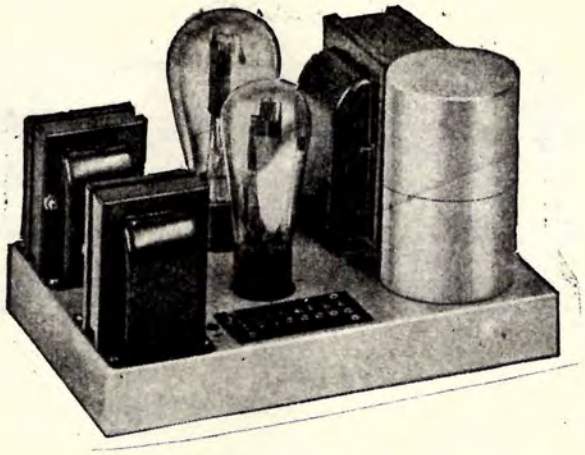

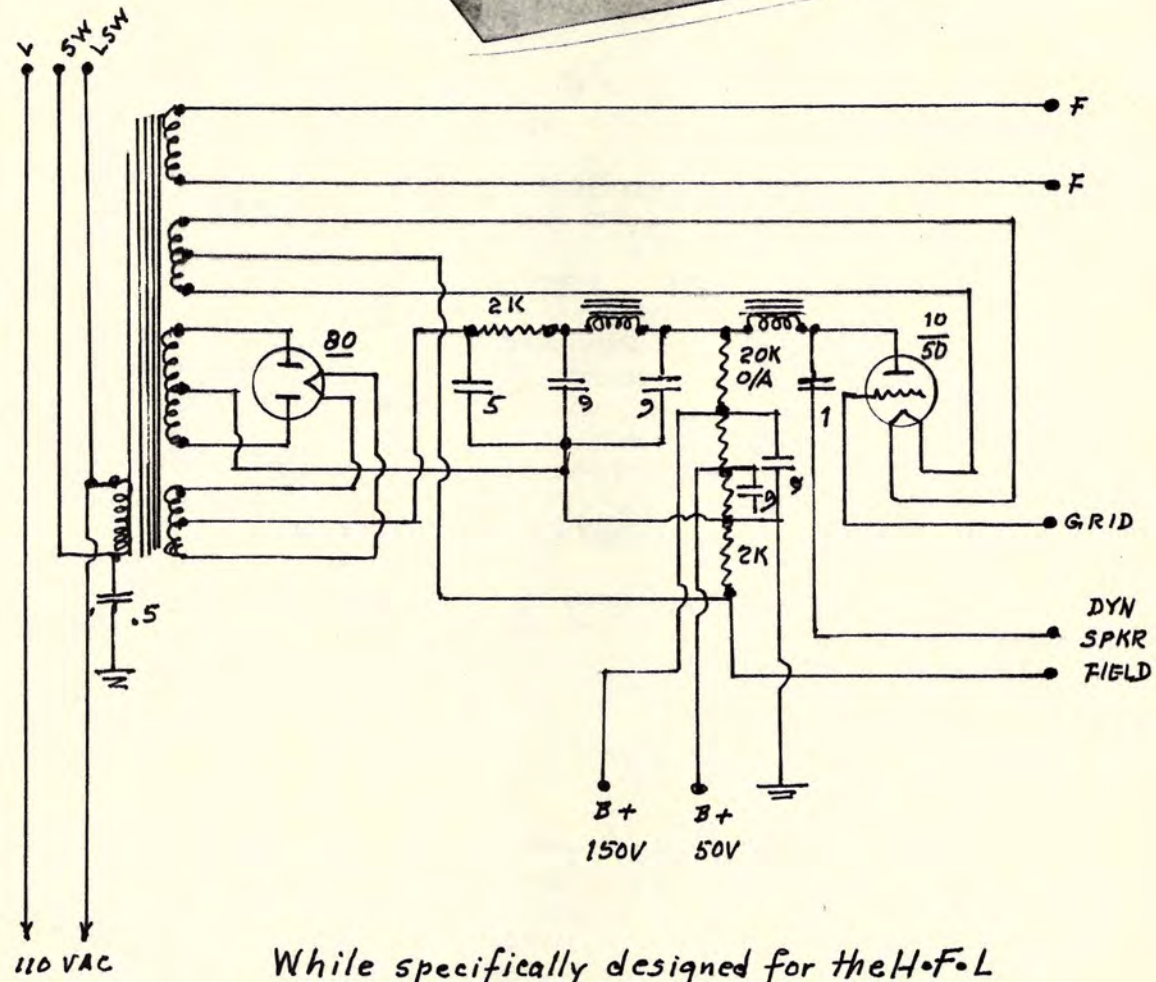

While specifically designed for the H•F•L In-Line AC sets, if you have the unit, it can be easily adapted to other receivers.

(CB-3-29)

THE FIRST FENWAY SUPER-HETERODYNE, 1926;Sht. 1

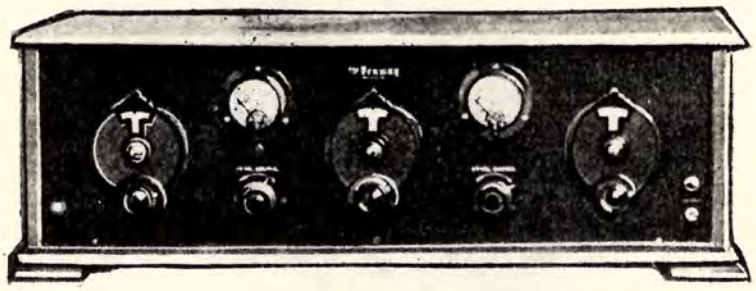

Leo Fenway was referred to in early Radio media as an accomplished engineer, author, radio expert. He might to likened, for a ready reference, to the young John Rider. He was also one of four writers for early media who copyrighted his own articles. In common with other early set designers who enjoyed a flurry of fame because of a circuit or set bearing their name - e.g., Bernard, Lynch, Bremer-Tully, Harkness, Victoreen - Fenway's super-hets lasted as long.

His first set was a conventional super-het for the period, the mid-Twenties, with a few innovations, especially in the manner of partial shielding, which was novel enough. When his circuit came into popularity, he went into manufacturing, and like Atwater-Kent, paid great attention to aesthetic or eye-appeal of his layout, coil housings, controls, panels, etc. His first circuit, however, called for what were called quality standard parts of others.

In this and other volumes you will find the evolutionary, or improvements of certain marques over the years, such as: Bremer Tully, Doerle, Pilot, Browning-Drake, Silver-Marshall, et. al., but while the Fenway series evolved in like manner, only Leo's first or original circuit is detailed in the following pages, as subsequently "improved" circuits were logical evolutions, offering little for your continuing edification.

The first of anything, however, is always the most interesting, within the context of its time and place, whether it be an initial realisation of the remarkable difference between boys and girls, the first step you take on foreign soil, or a radio circuit.

* * *
* *
*

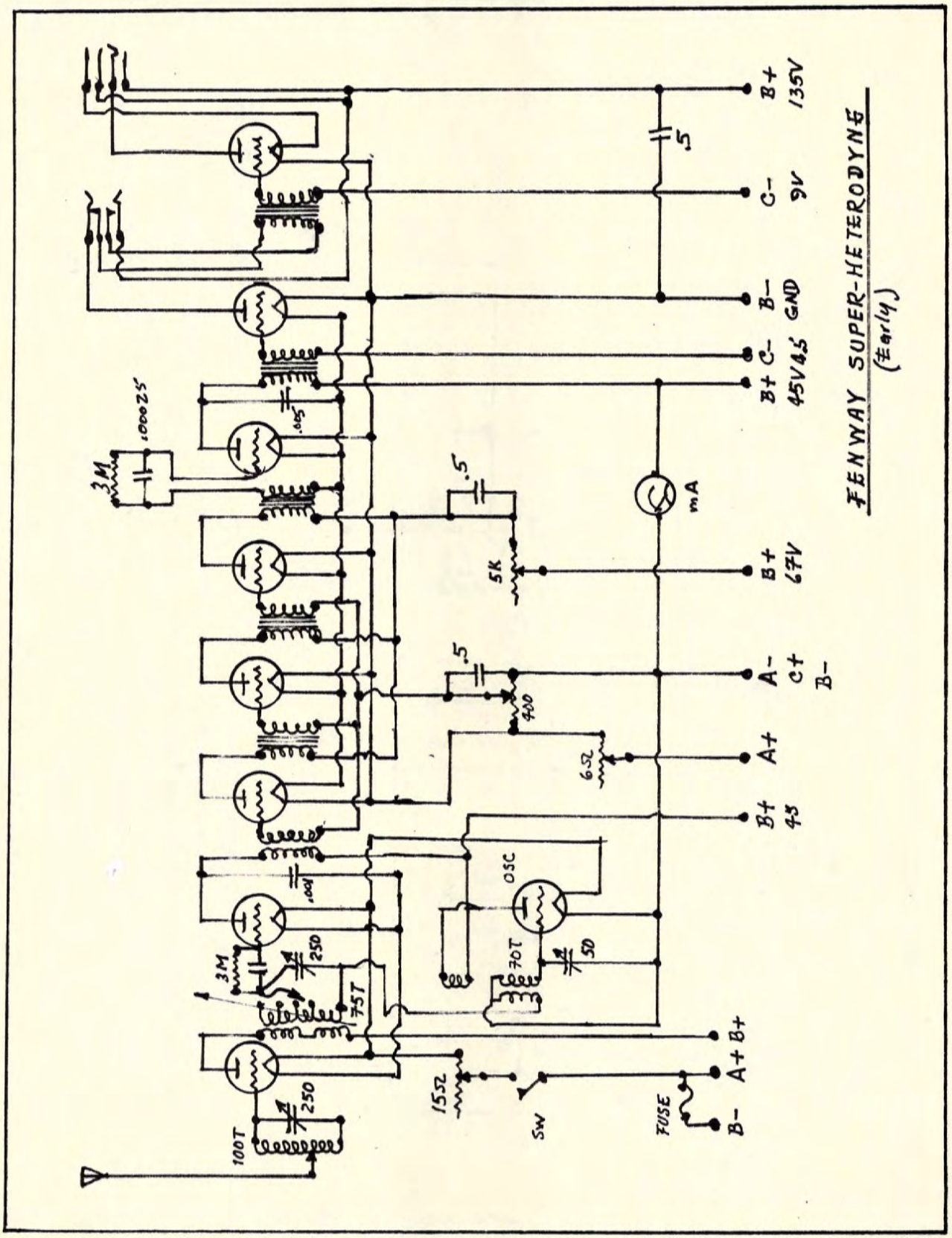
FENWAY SUPER-HETERODYNE
(Early)
B+ 135V
C- 9V
B- GND
C- 45V 4.5
B+ 67V
A- C+ B-
A+
B+ 45
A+ B+
B-
mA
.5
5K
400
6Ω
15Ω
SW
FUSE
OSC
70T
50
250
75T
100T
3M
.0025
.005
.001

THE 1st FENWAY SUPER-HET; Sht. 2

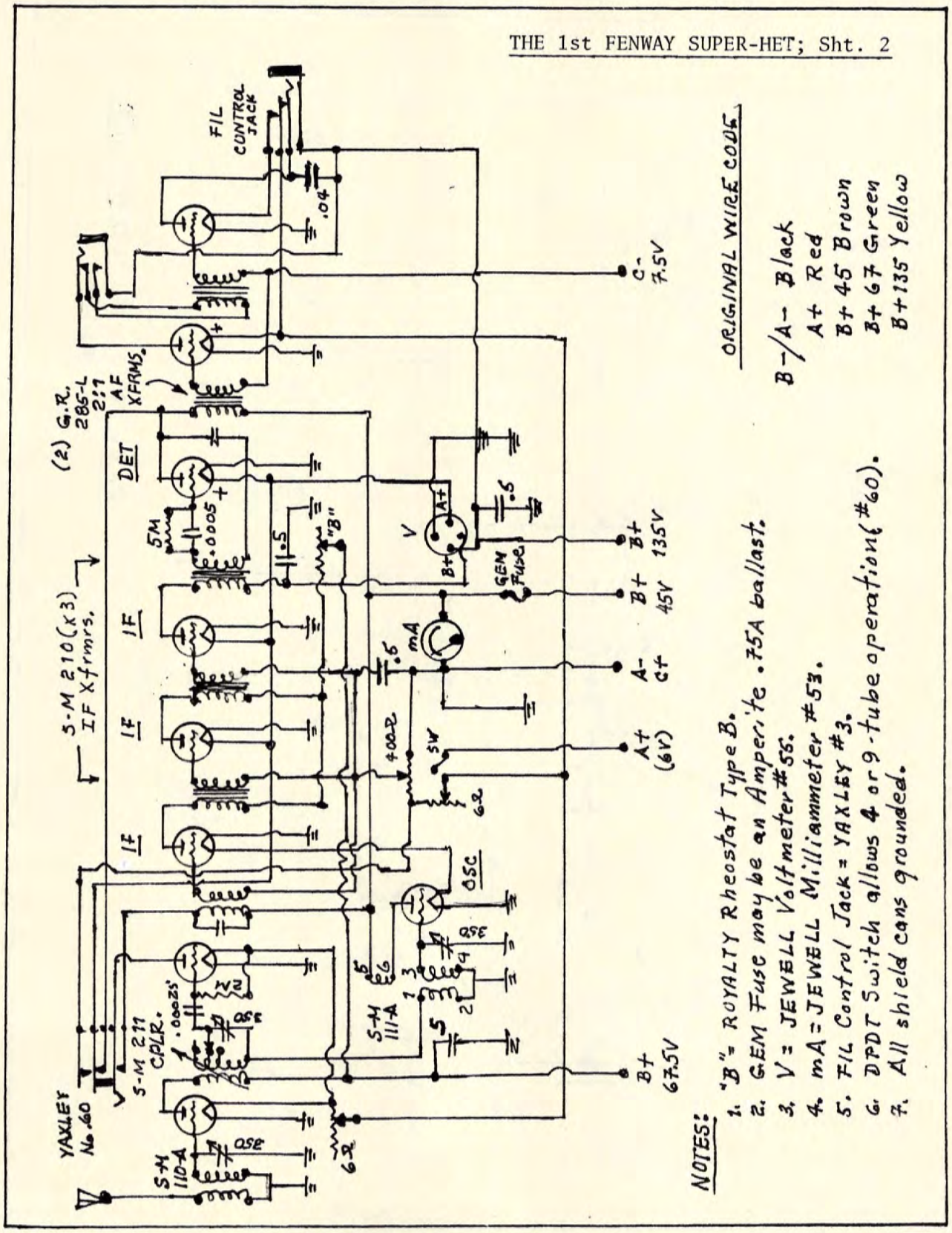

ORIGINAL WIRE CODE

B-/A- Black
A+ Red
B+ 45 Brown
B+ 67 Green
B+ 135 Yellow

NOTES:

1. "B" = ROYALTY Rheostat Type B.
2. GEM Fuse may be an Amperite .75A ballast.
3. V = JEWELL Voltmeter #55.
4. mA = JEWELL Milliammeter #53.
5. FIL Control Jack = YAXLEY #3.
6. DPDT Switch allows 4 or 9-tube operation (#60).
7. All shield cans grounded.

THE 1st FENWAY SUPER-HET; Sht. 3

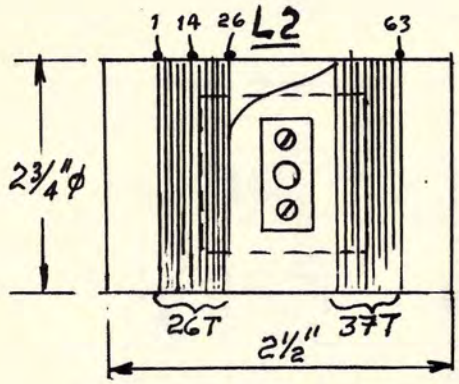

STATOR
(#30-32 DSC/DCC)

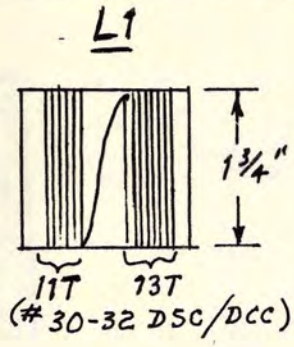

ROTOR

COUPLER

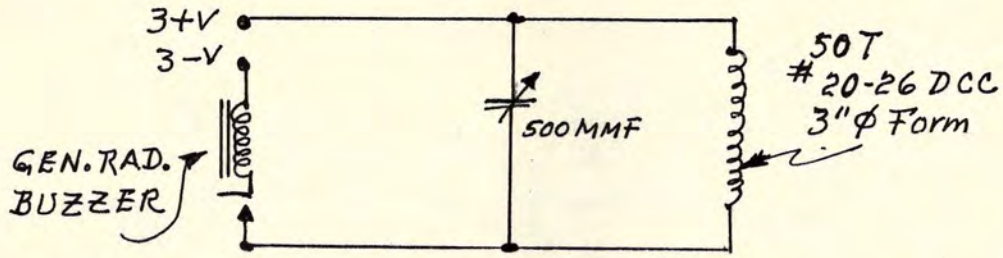

HOME-MADE WAVE-TRAP

Place near a short wire connected to the set and in inductive relation. Set variable condenser at mid-point; listen with phones, and vary (rock) both variables. Signals. Signals from the buzzer should be heard. If no signal, set wave-meter dial at 40 or 60 and try again. If the first two tubes are functioning signals will be heard over the entire scale.

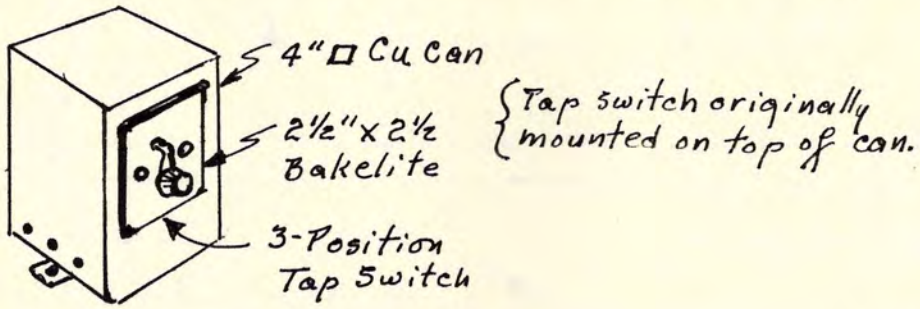

COUPLER SHIELD

(RVV 2·6·26)

THE 1st FENWAY SUPER-HET; Sht. 4

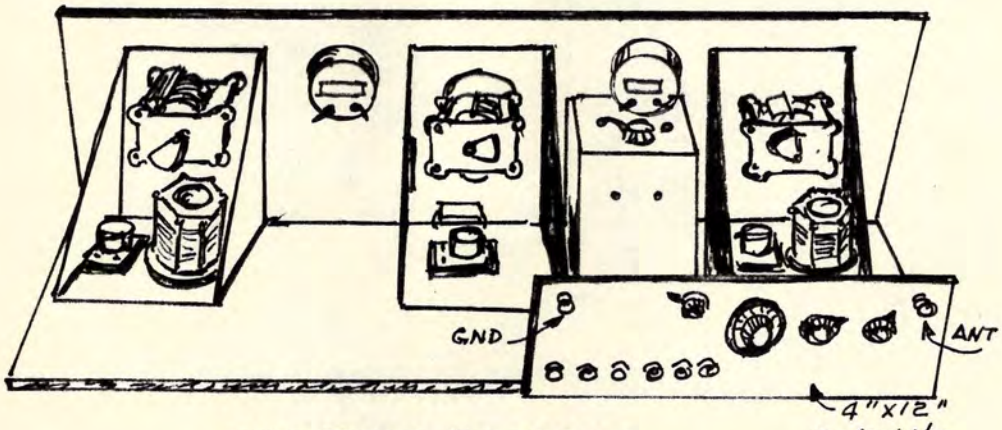

THE FIRST 3 STAGES

PANEL= 8"x28".
BASEBOARD = 9½"x27½"x½"
50' "Celaltsite" Wire; ¼ lb. copper wire DSC/DCC.
GENERAL RADIO 374-F Variables (350 mmf).
(3) AIRGAP Sockets; (3) Standard UX sockets; (2) S-M sockets.
(3) NAT'L. Velvet Vernier Dials.
(3) Shield cans made to suit.
Original cost: $145.
RANGE = 60 to 600 Meters, w/ S-M plug-in coils.

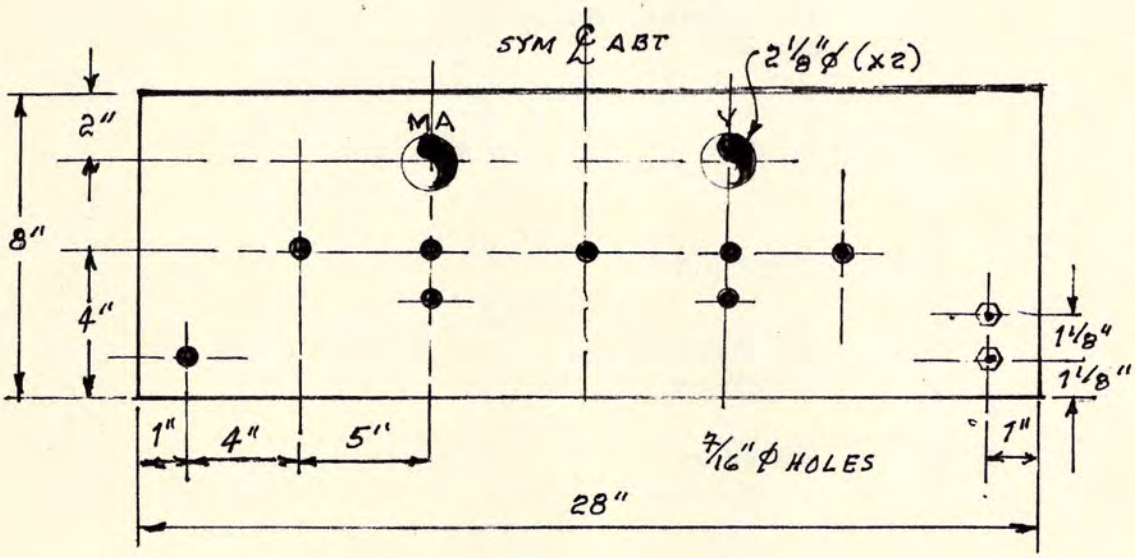

THE 1st FENWAY SUPER-HET; Sht. 5

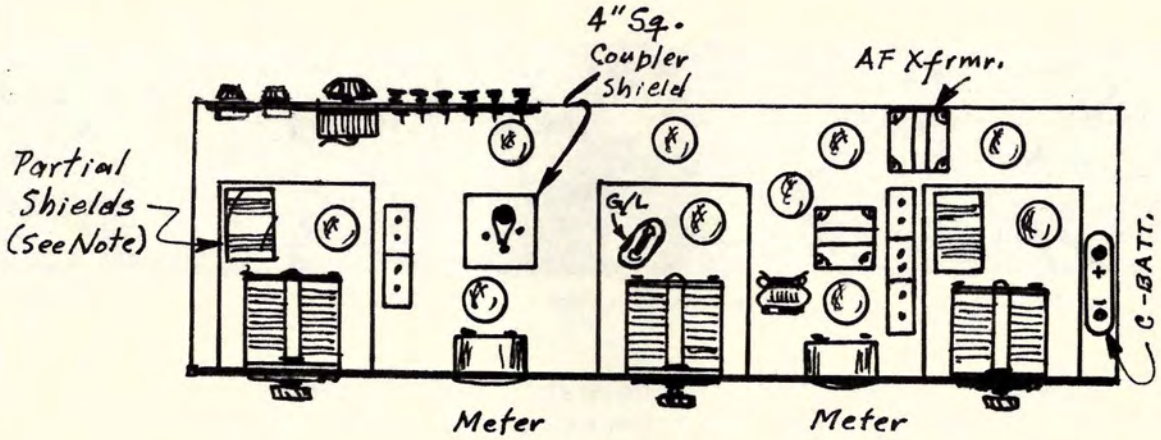

PLAN VIEW

NOTE

Second version employed Hammarlund shield boxes, with full sides, corner posts, and optional covers.

Silver-Marshall 110-A plug-in coils were also used, in conjunction with 111-A.

FORBES' SUPER-HET, 1923; Sht. 1

Front View of Assembled Set

Among old-timers of the early days of Radio, you will frequently hear joking references to how the early super-hets required panels a yard long. Actually, it isn't a joke, as many super-het circuits, as kits, were offered with a 36" panel, and usually with a deep baseboard.

The Forbes super-het called for the longest front panel I have yet come across - nearly 40", and the baseboard only one inch shorter. The panel was hard rubber and the baseboard was ash. In time, as you've probably already learned, hard rubber panels, dials, knobs, etc., warp, disintegrate, take a set that cannot be corrected, and would structurally 'chill' the area under a screw-head.

This was before the advent of Bakelite, long before the advent of the lovely Lignole panels, but was contemporary with Formica, which was to become a favourite panel material. A little research has suggested, simply, that the hard rubber panels were cheaper than anything else at the time, and that most of them were made by tire companies.

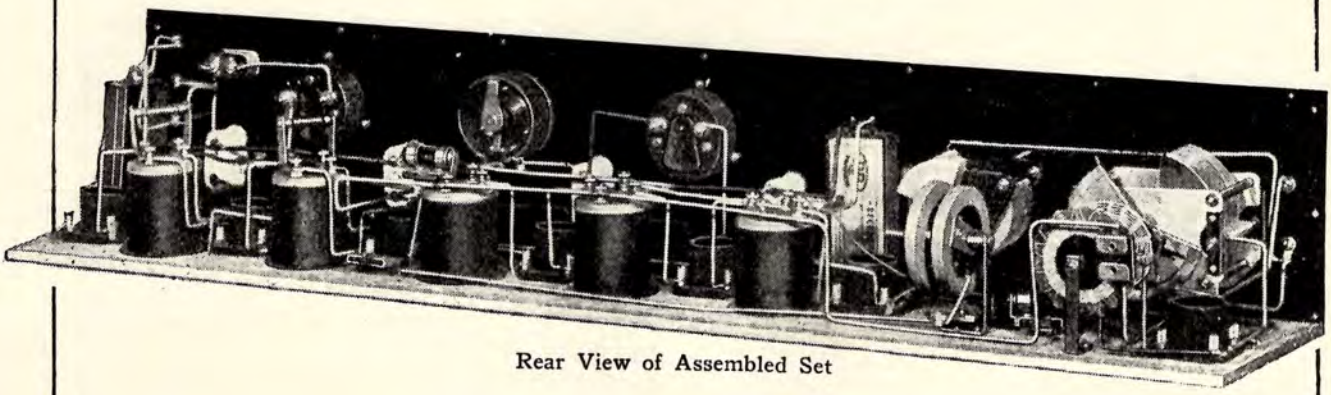

Rear View of Assembled Set

FORBES SUPER-HET, 1923; Sht. 2

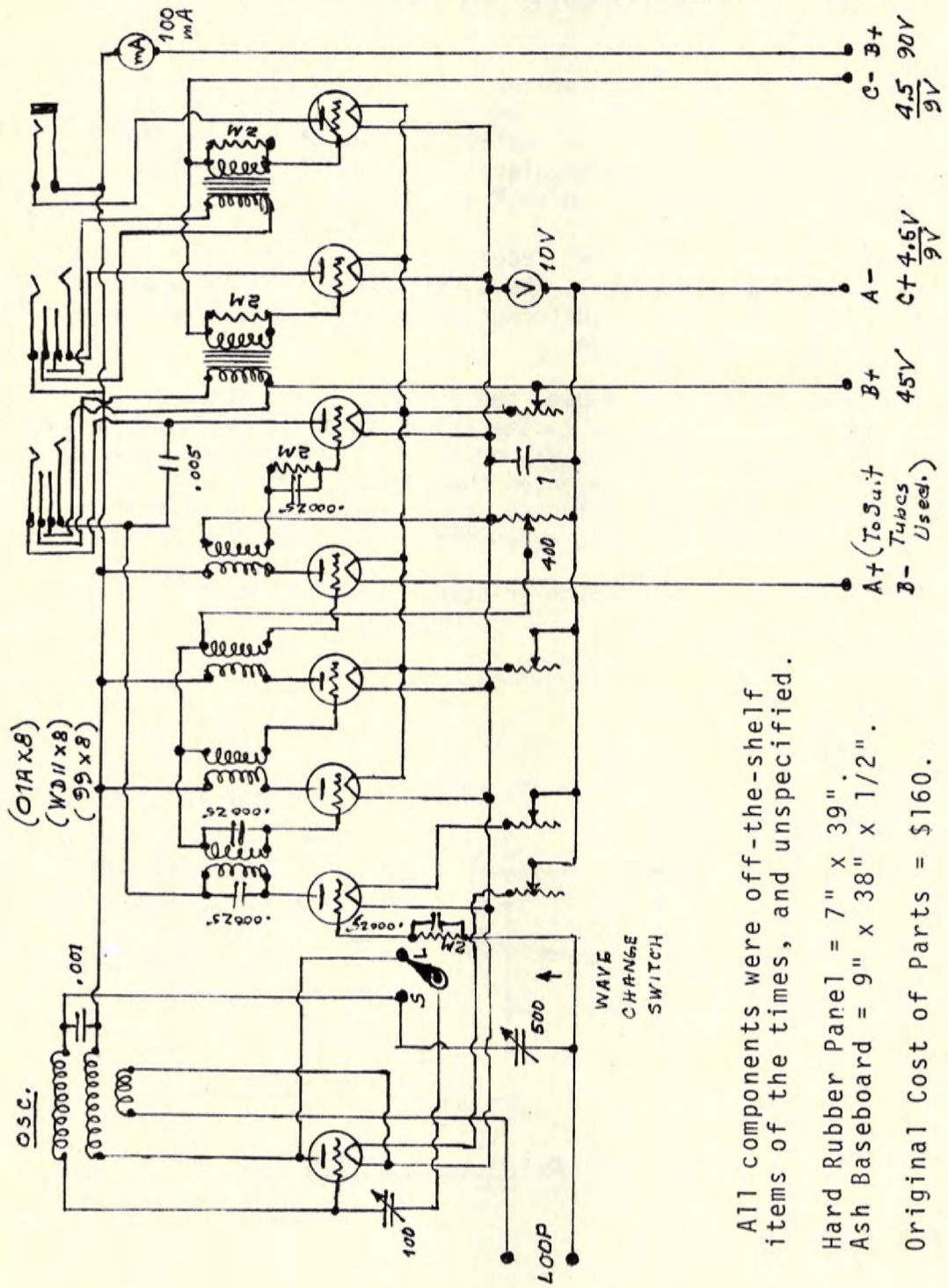

All components were off-the-shelf items of the times, and unspecified.

Hard Rubber Panel = 7" x 39".
Ash Baseboard = 9" x 38" x 1/2".

Original Cost of Parts = $160.

THE "TROPODYNE" SUPER-HETS, 1925-1926; Sht. 1

One of the most prolific writers for early Radio media was a radio engineer named Clyde Fitch. His concept of what came to be called "The Tropodyne Principle" and individually tuned RF stages was highly praised, and both concepts were immediately picked-up by other designers, including Pressley, Braxton-King, High Frequency Labs.

There were two "Tropodyne" receivers offered the home-constructor, both having the same circuitry. The difference was in the improved 'packaging' of the special RF transformers (coils). Both configurations are depicted on the following pages.

The Tropodyne Principle used the first tube as both DET and OSC, and while it was enthusiastically touted and Fitch actually patented the concept, its hour in the Radio sun was brief. The synthetic controversy over whether Pressley or Fitch invented the principle was short-lived, and Fitch's patent was never challenged, even though challenging filed patents was a massive indoor sport among early Radio manufacturers.

The theory of the Tropodyne Principle is shown below:

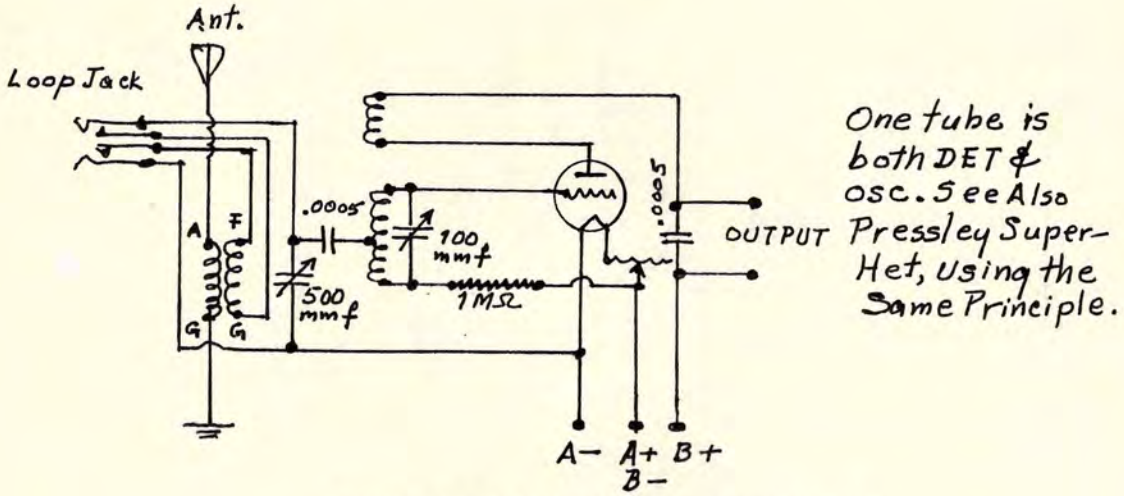

THE TROPODYNE PRINCIPLE

THE "TROPODYNE" SUPER-HETS, 1925-1926; Sht. 2

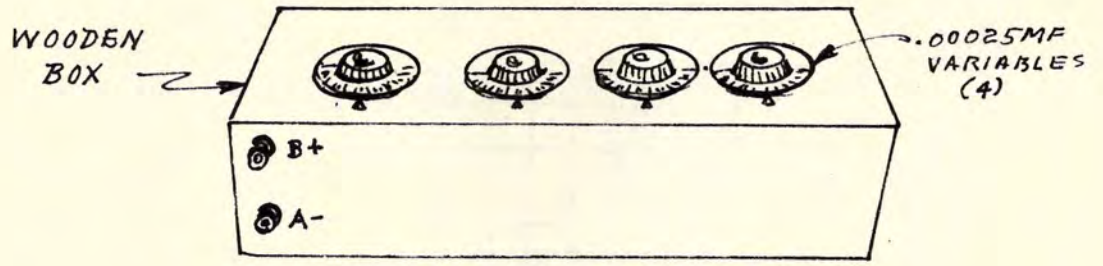

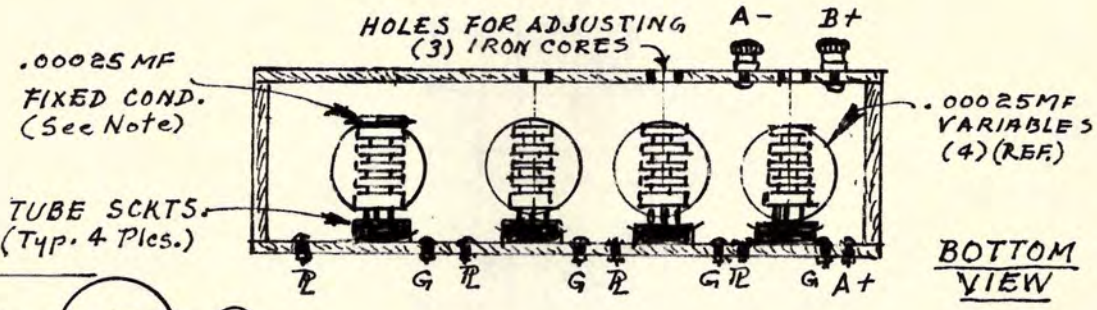

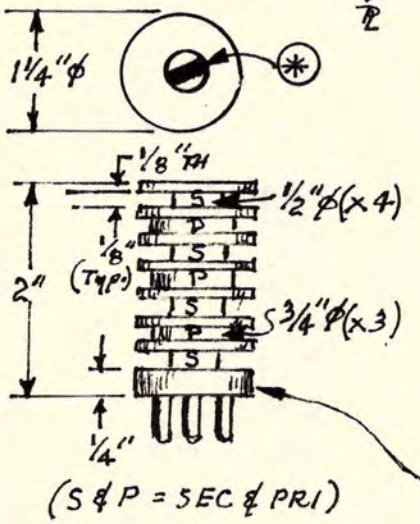

I.F. TRANSFORMERS: 4 REQUIRED

PRI = 300 T.; #34 SSC; 100T per slot.
SEC = 600T.; #34 SSC; 150T per slot.

PRI tuned with .00025 MFD Variables.

(*) = Adjustable iron core: 3 pieces of silcon steel 2" lg. x ½" w. x .003" thick. (Changed in the later versions:see over-leaf.)

Bobbin was a piece of hard rubber rod, turned on a lathe and drilled through.

NOTE: The .00025 MFD condenser shunted across the SEC winding made this xfrmr. the input or filter transformer.

(RNSB)

THE "TROPODYNE" SUPER-HETS, 1925-1926; Sht. 3

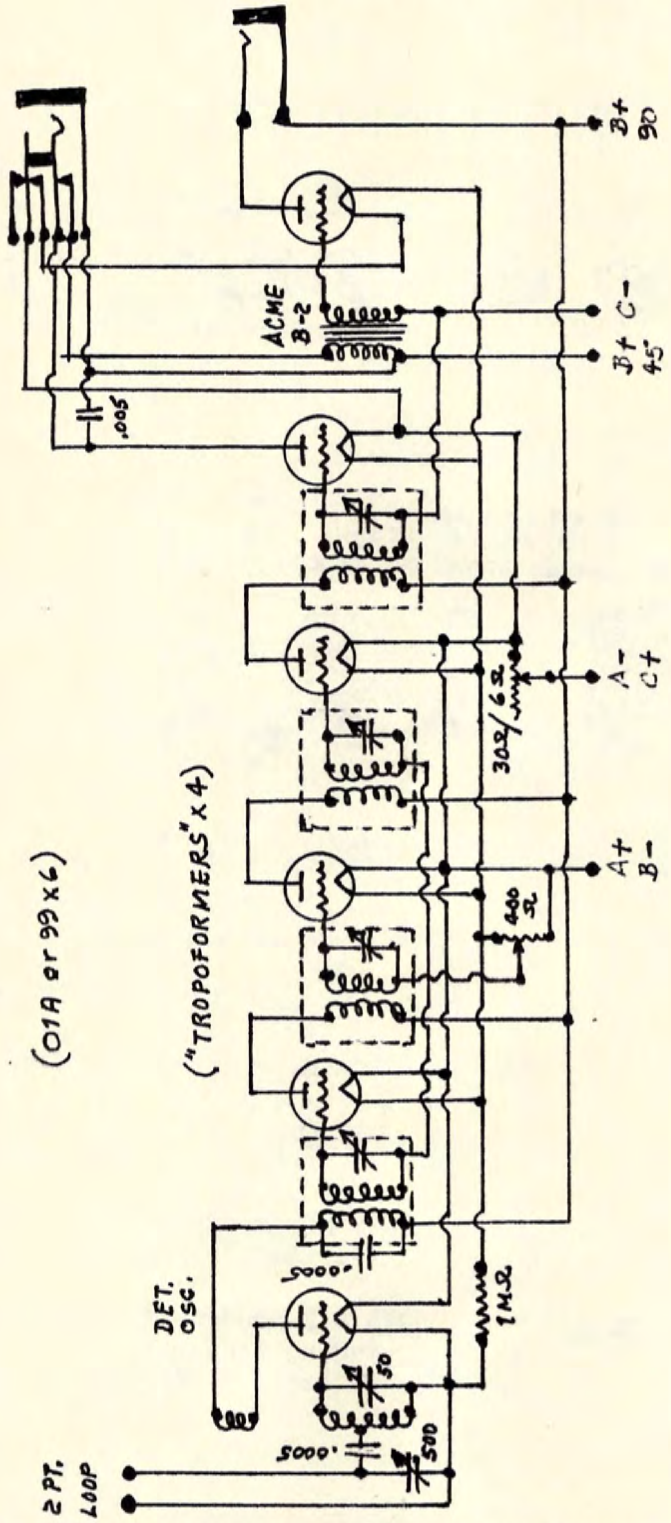

ADJUSTING "TROPOFORMERS":

1. Place all dials @ 50.
2. Tune in a station.
3. Tune one xfrmer @ a time.
4. Rotate 400Ω pot. for clearest signal.

FITCH "TROPODYNE" SUPER-HET, 1925; Sht. 1

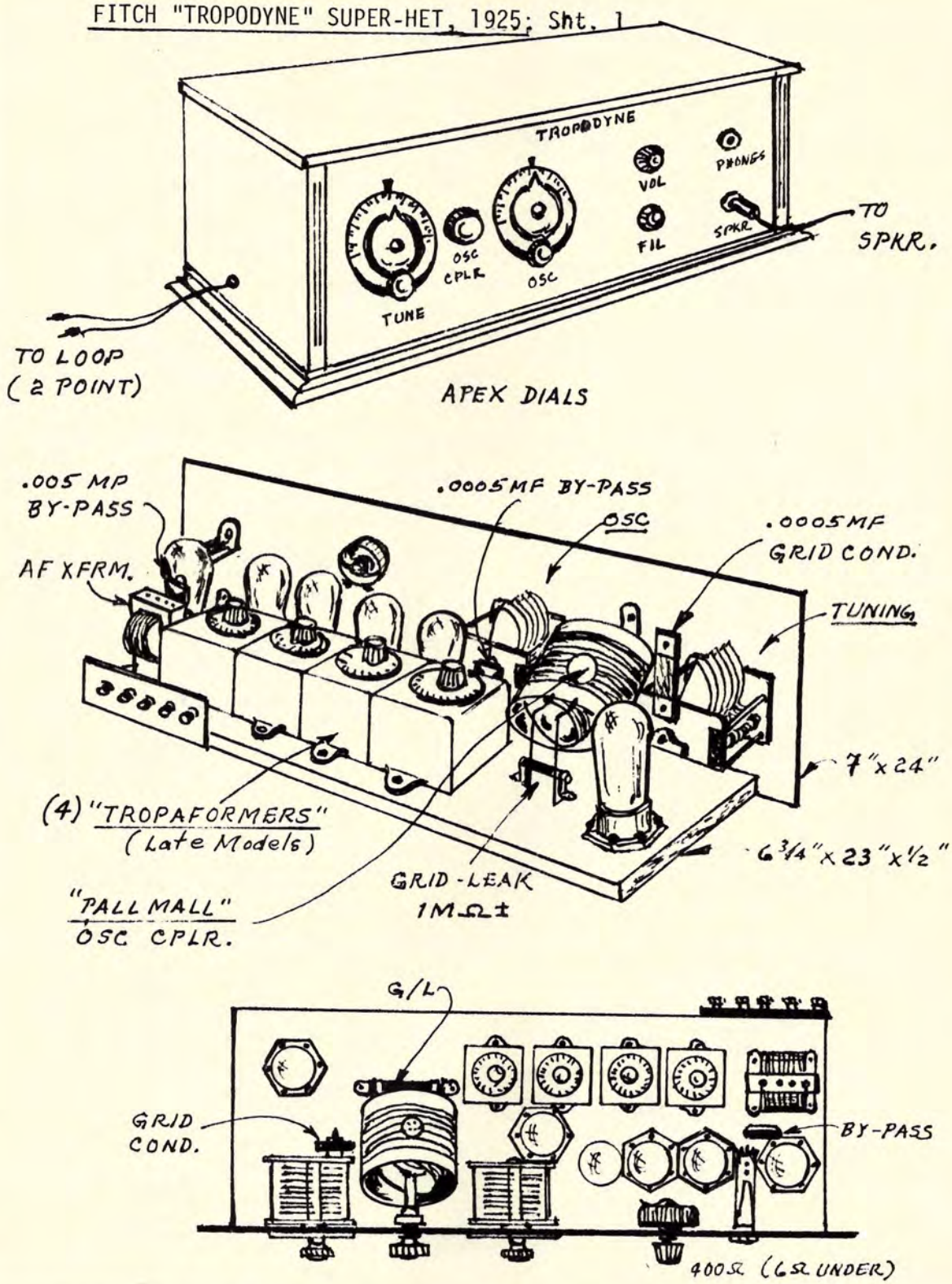

FITCH "TROPODYNE" SUPER-HET, 1925; Sht. 3

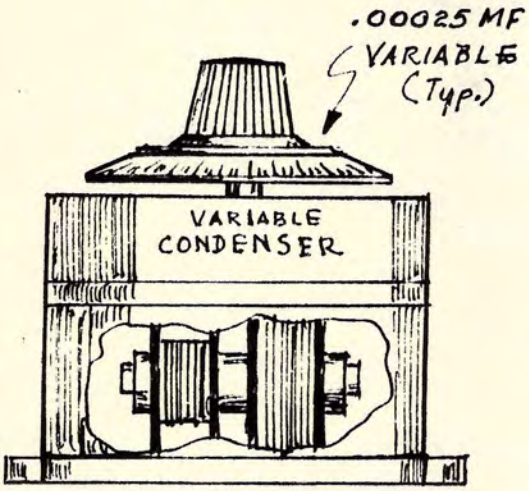

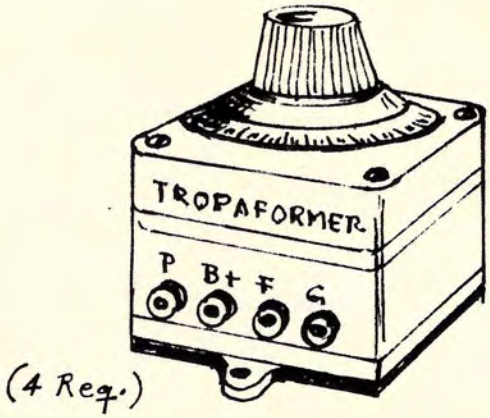

MOULDED HARD RUBBER BOX: WOOD MAY BE USED IF YOU WIND YOUR OWN COILS.

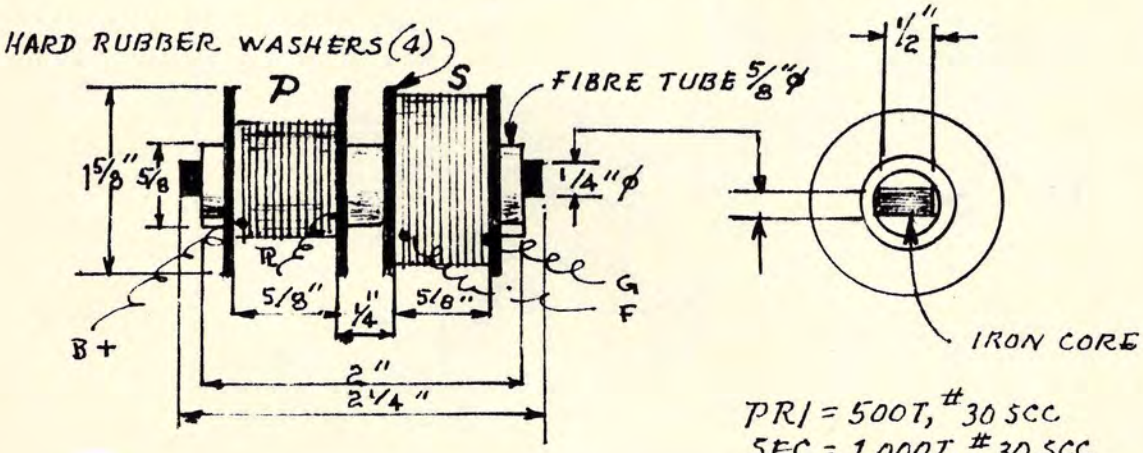

PRI = 500T, #30 SCC
SEC = 1,000T, #30 SCC

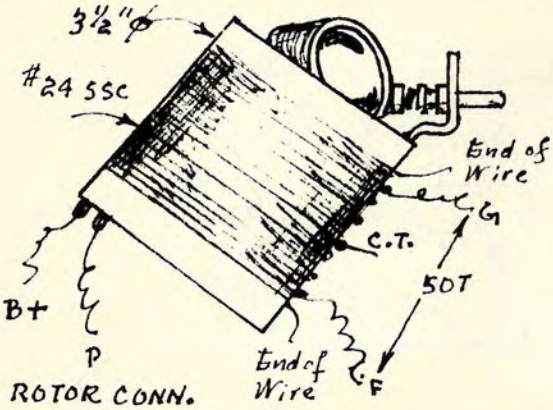

OSCILLATOR COUPLER DETAILS

"PALL MALL" brand coupler used by Fitch. Any good quality Variocoupler may be used.

The ROTOR was used as a TICKLER.

Covered all BC. bands.

50 KC TRAP-CIRCUIT SUPER-HET, 1926;Sht.1

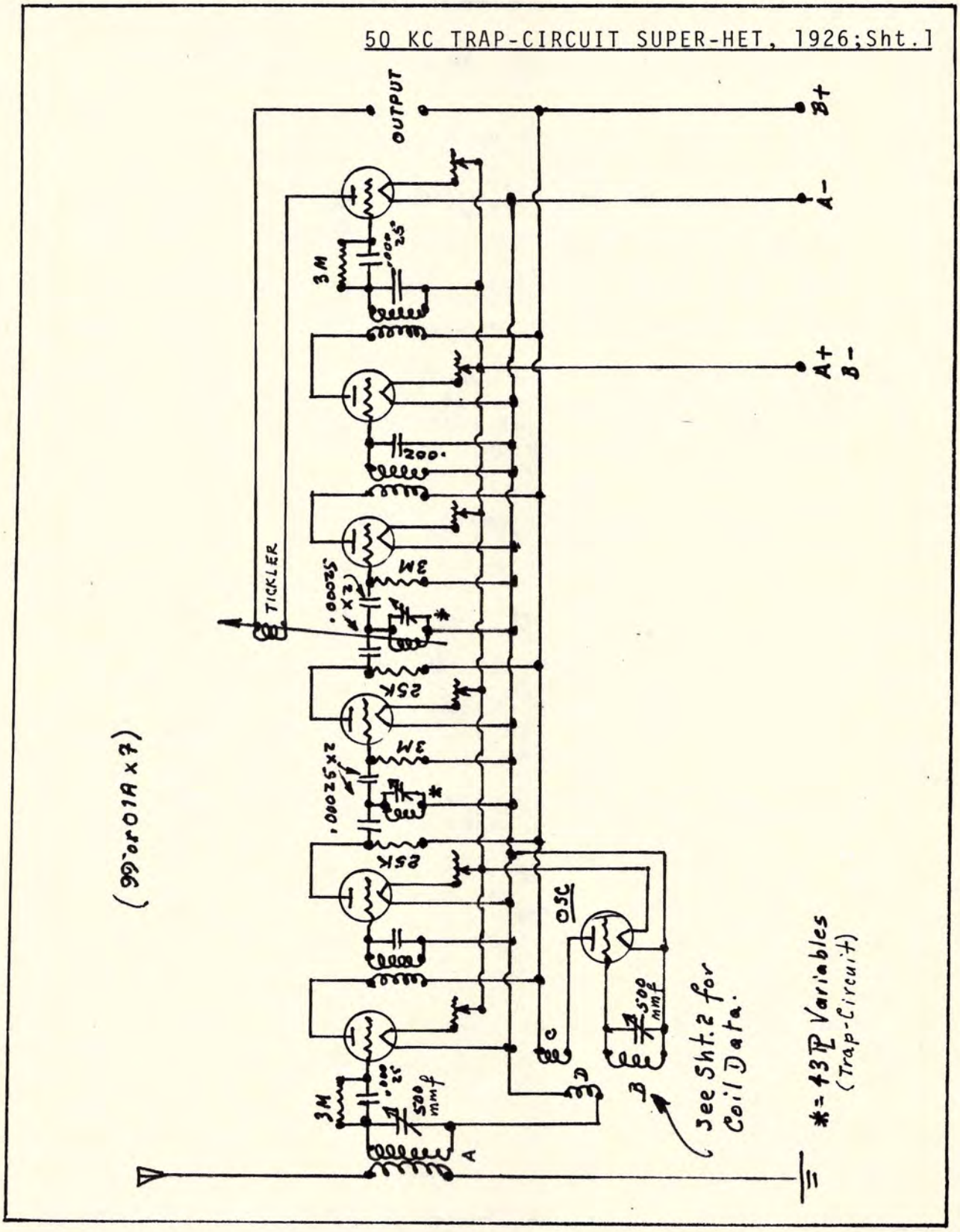

50 KC TRAP-CIRCUIT SUPER-HET,1926;Sht2

General Notes:

1. The DET and OSC coils employed were of the type deemed standard at the time - e.g., Remler, Camfield, Thor, etc. The Remler OSC is recommended.

2. An AF amplifier of any type may be added.

3. The original circuit was laid out on a 38" board!

4. The RF transformer connected between the 1st IF transformer and the 1st DET was a standard type; the grid circuit of this tube functioned in the conventional fashion.

Coil Winding Data:

Coil Form = 3" Ø.

(A) ANT Coil: 64 turns of #18 SCC wire.

(C) Plate Coil: 40 turns #18 SCC wire.

(B) Grid Coil: 64 turns #18 wwre wound 1/2" from end of plate coil winding on the same form.

(D) Pick-Up Coil: 10 turns #18 wire wound on end of OSC inductance tube.

* * *
* *
*

GENERAL RADIO 30KC SUPER-HET, 1927; Sht.1

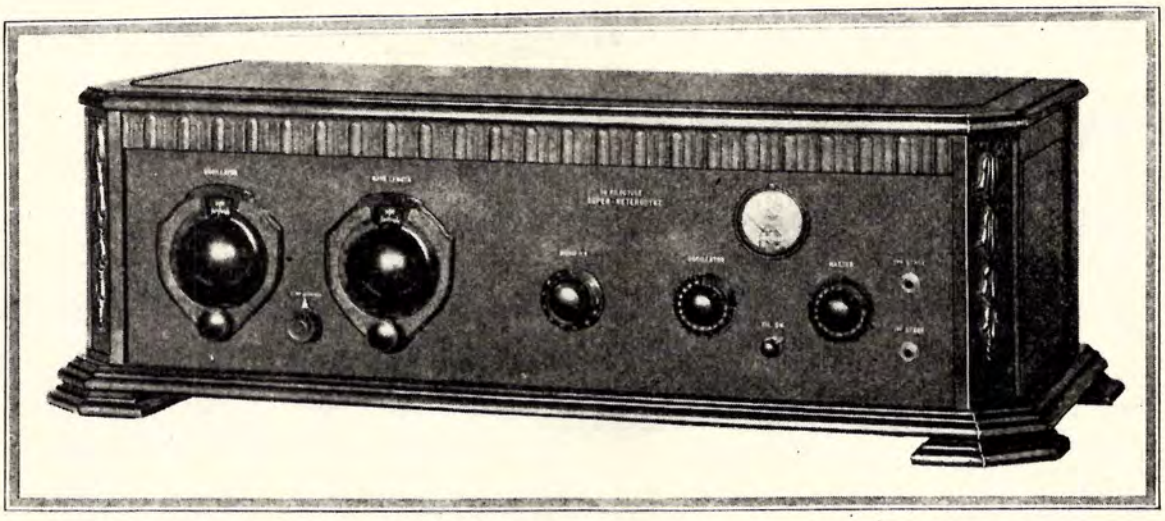

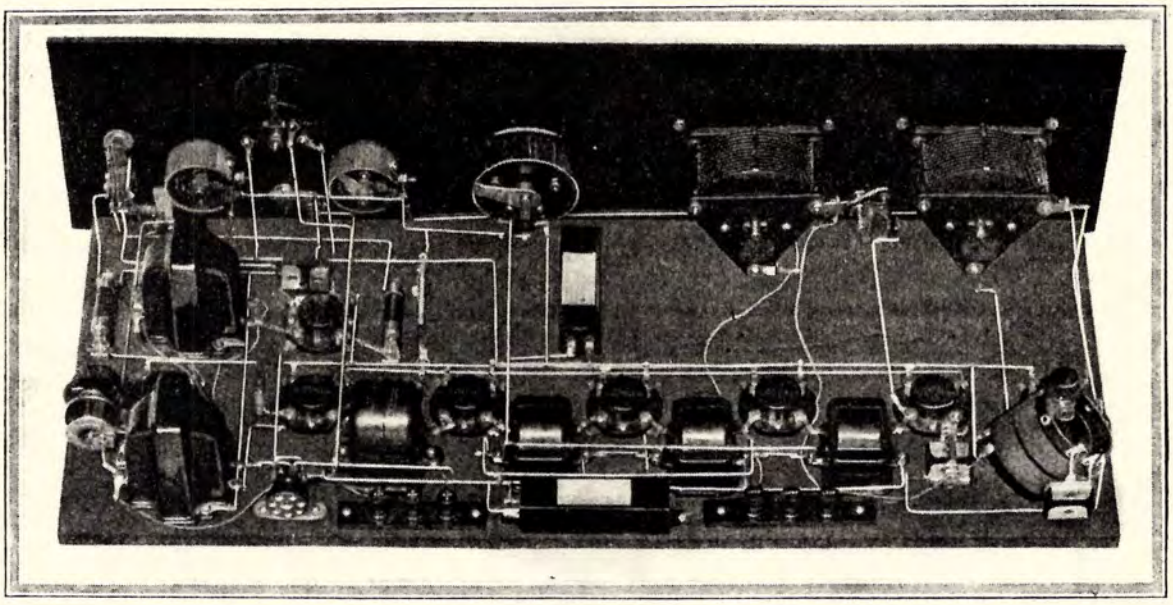

GENERAL RADIO 30KC SUPER-HET, 1927; Sht. 2

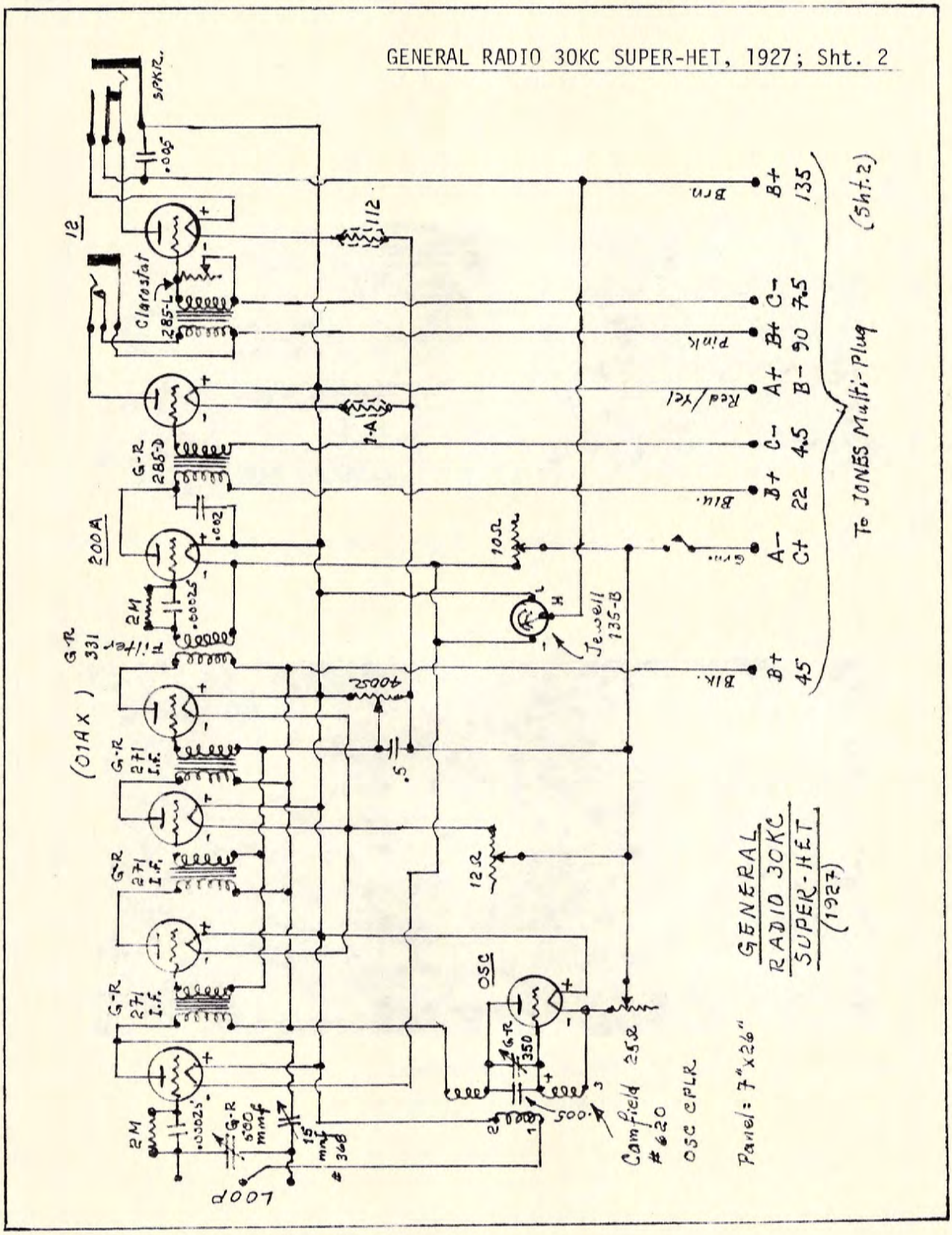

NOTES

A.J.HAYNES SUPER-HET, 1924; Sht. 1

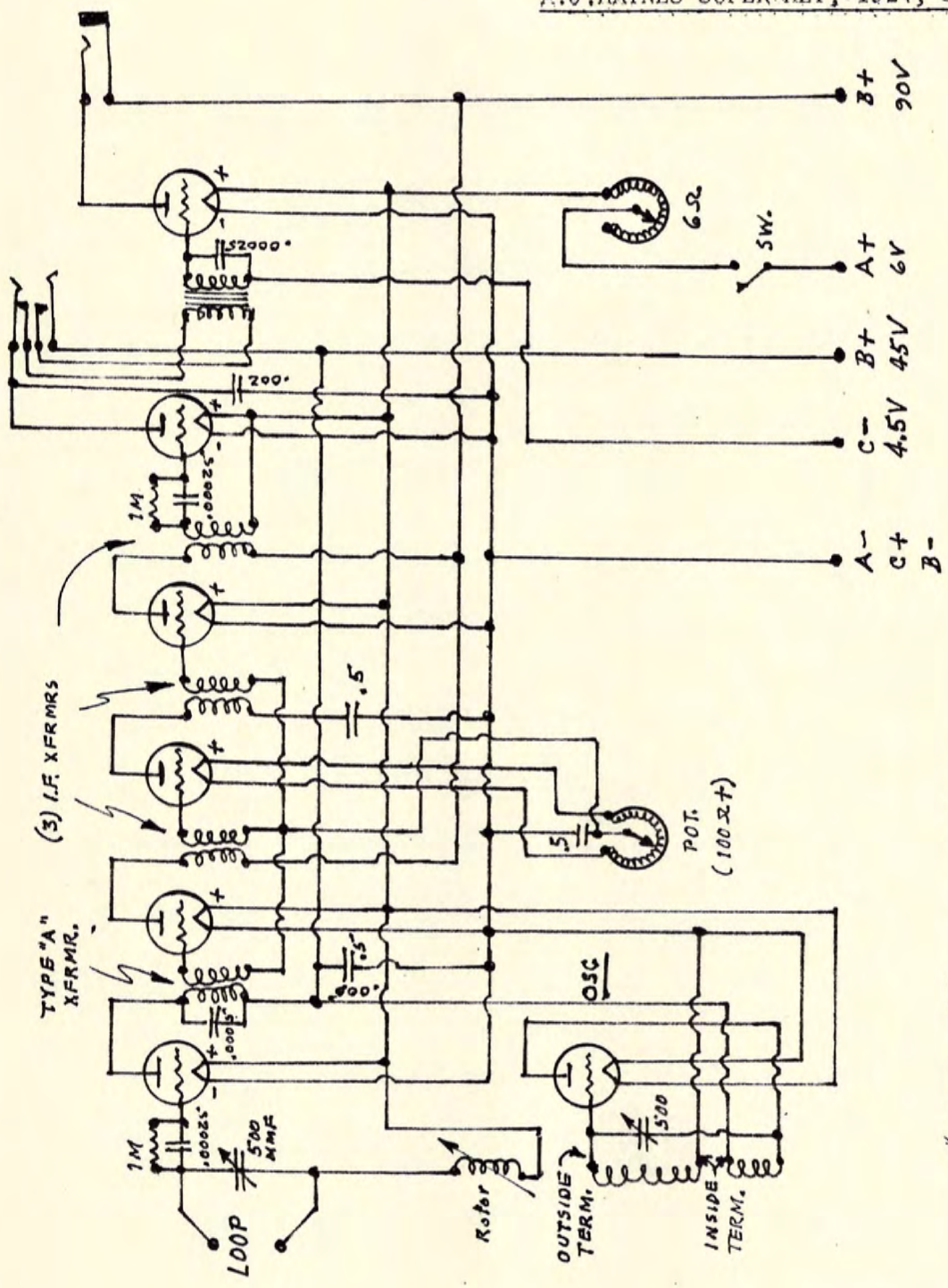

#14 Tinned Copper Buss-Bar, except #18 Bell-wire for B+ & FIL.

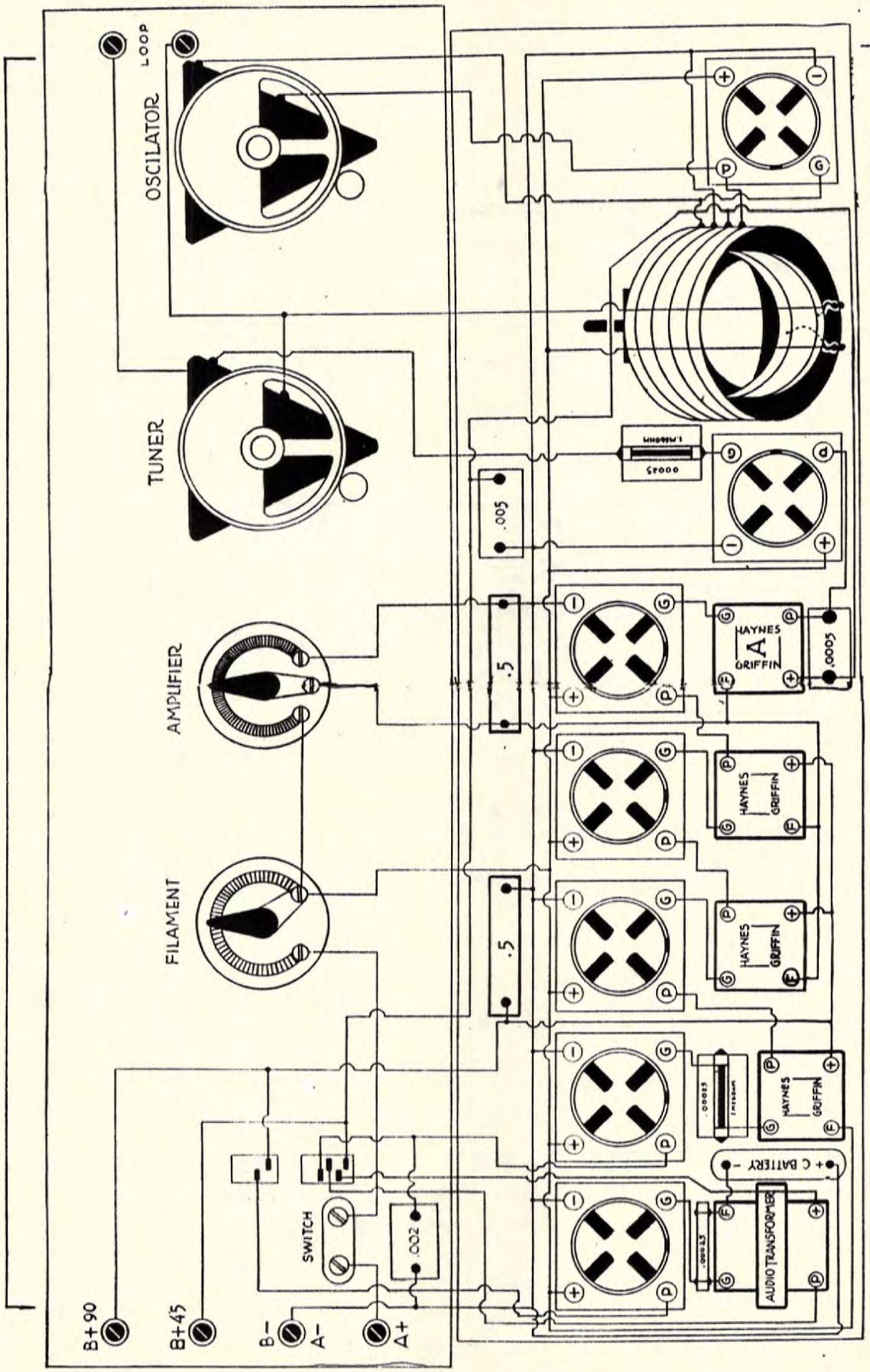

-Detailed Layout and Diagrammatic View of Super

By A. J. HAYNES

(An Example of Early Draftsmanship.)

A.J.HAYNES SUPER-HET, 1924; Sht. 3

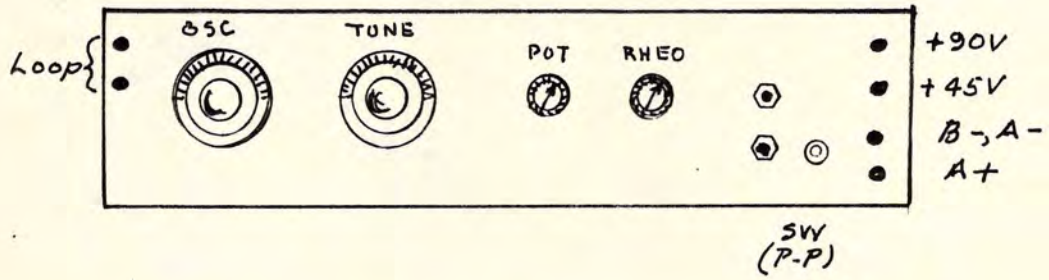

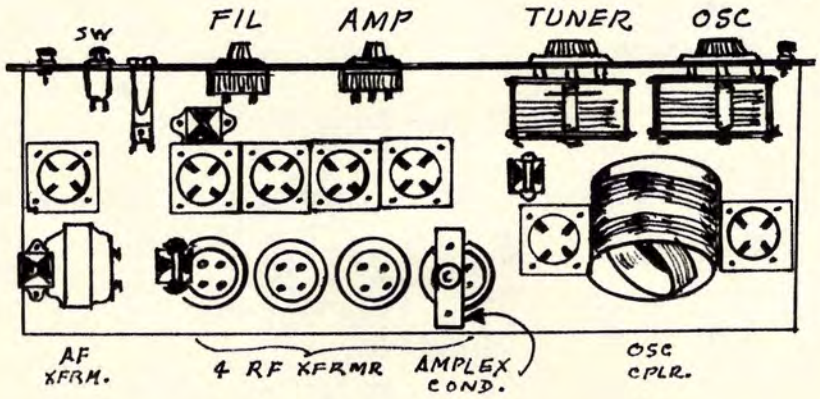

PARTS LIST

(2) H-G 500 mmf Variables.
H-G Osc.-Cplr.
(4) H-G RF Xfrmrs.
(7) H-G. Sockets.
H-G #91 AF Xfrmr.
H-G Dble-Circuit Jack.
H-G Single. " " ,
(6) Binding Posts.
Amplex Variable Input Condenser, Type H.G.

Panel = 7"x24" Hard Rubber.
Bascb'd. = 7"x23" (Oak).
Pot. 400Ω.
1MΩ Grid-Leaks (2).
Fixed Cond. = .5MFD(2); .002, .005, .00025, .00025 #601-G(2).
Rheostat = 2Ω.

Original cost, 1924 = $72.13. This was not exactly aimed @ the average home-constructor, although an impressively effective set.

A.J.HAYNES' "DeLuxe" SUPER-HETERODYNE, 1924; Sht.1

Apparently encouraged by the popularity of the first super-het to be offered in kit form a year before, Haynes went on to design a more sophisticated version, detailed herein.

The so-called DeLuxe version incorporated a stage of TRF ahead of the super-het circuit, said to increase sensitivity and selectivity. This stage could be cut in or out by flipping a switch, shown above the loop coil on the schematic. Throwing the switch had no effect on the oscillator tuning.

The Haynes components included a geared vernier set of condensers, the AF transformer, input condensers, Oscillator coupler, the first RF transformer, and, of course, the set of Haynes-Griffith RF transformers. Other components were of quality manufacture, such as by Rathbun, Cutler-Hammer, Dubilier, Marco and Daven.

The oscillator coupler was a diamond-winding, details of which will be found on sheet 3. The RF transformer ahead of the first detector was of two diamond windings, spaced .250" apart.

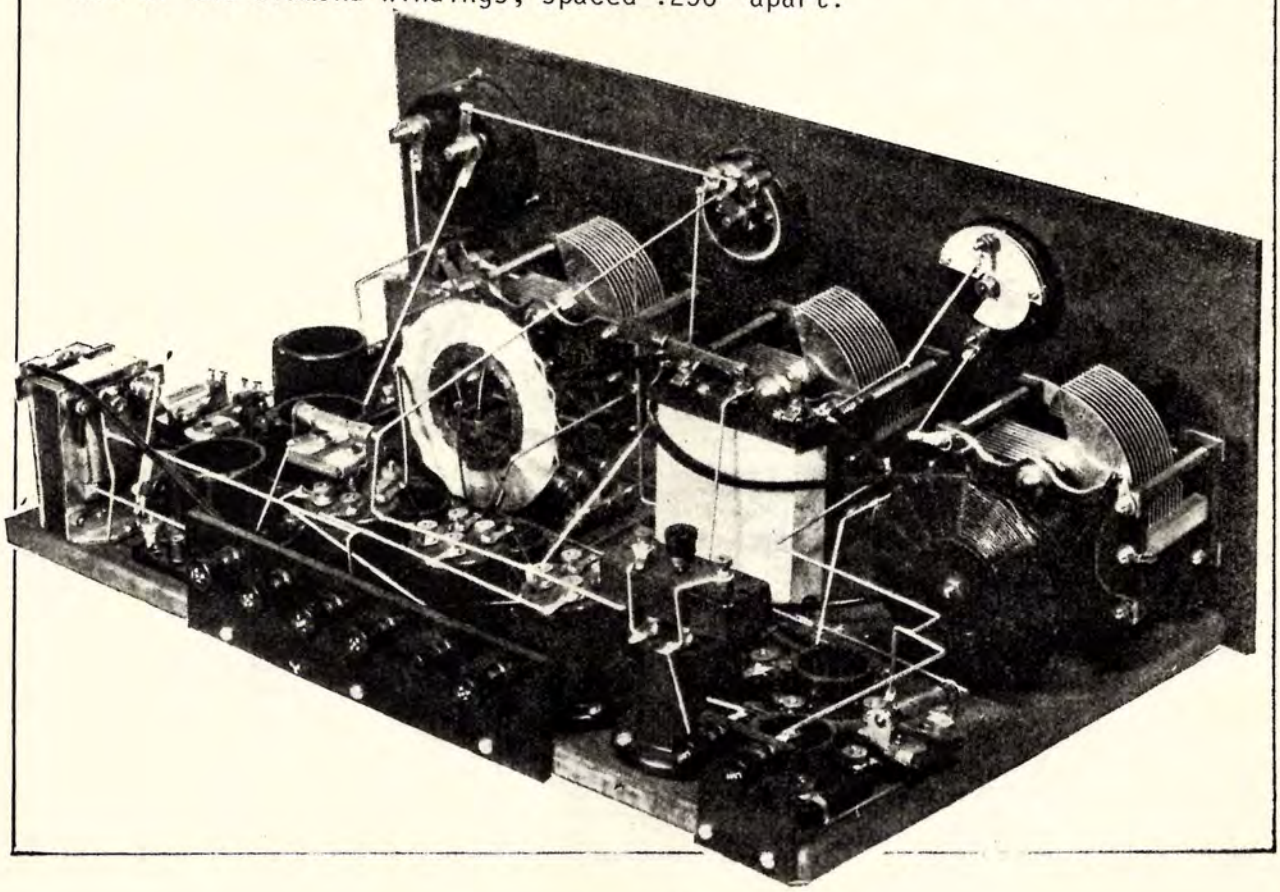

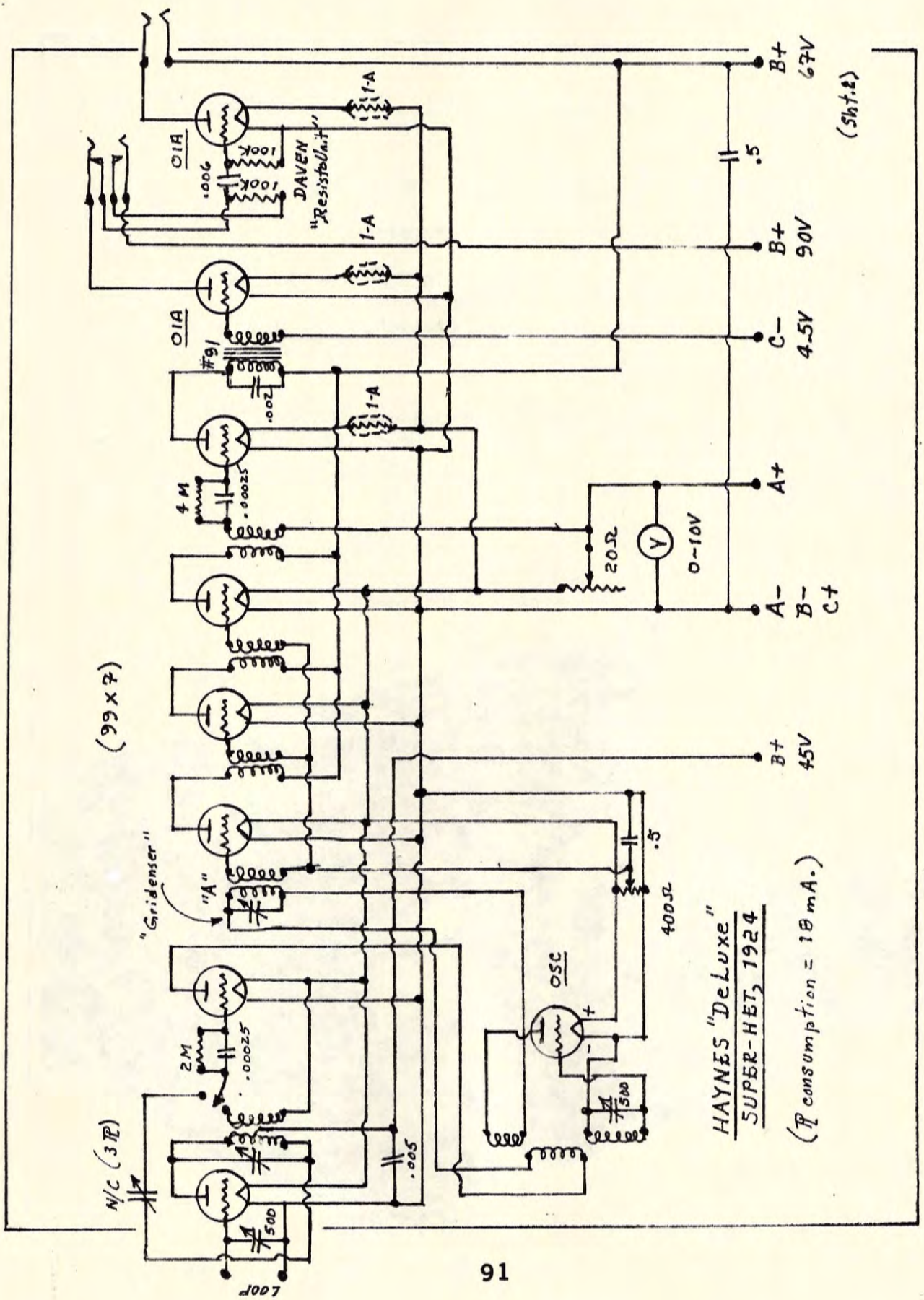
HAYNES "DeLuxe"
SUPER-HET, 1924
(Ⓟ consumption = 18 mA.)
(Sht. 2)
(99 x 7)
N/C (3Ⓟ)
"Gridenser"
"A"
2M
.00025
.005
500
1007
OSC
400Ω
.5
45V
B+
20Ω
0-10V
A+
A-
B-
C+
C-
4.5V
90V
67V
01A
.006
100K
DAVEN
"Resistoline"
1-A
#91
.002
4M

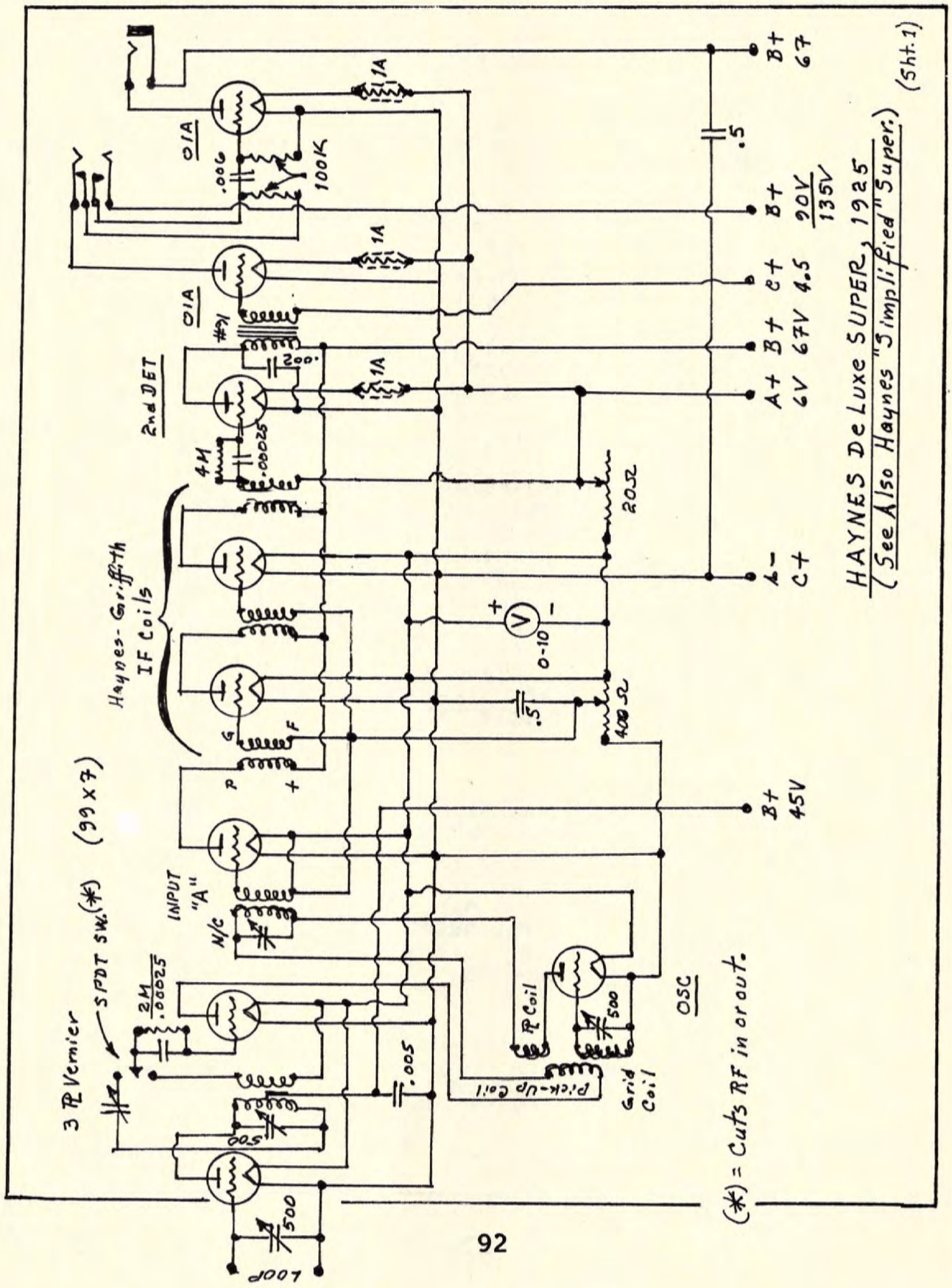
HAYNES De Luxe SUPER, 1925
(See Also Haynes "Simplified" Super.)
(Sht. 1)
B+ 67
B+ 90V/135V
B+ CT 4.5
A+ B+ 67V
6V
A- CT
B+ 45V
01A
2nd DET
Haynes-Griffith IF Coils
(99 x 7)
INPUT "A"
N/C
3 Pl Vernier
SPDT SW. (*)
OSC
Pick-up Coil
Grid Coil
Pl Coil
100K
1A
.5
20Ω
400Ω
0-10
.005
.00025
500
(*) = Cuts RF in or out.

HAYNES DeLUXE SUPER-HET; Sht. 2

COIL WINDING DATA:

Oscillator Coupler:

Winding form = circular wooden disc 1.5" Ø. Drill 15 holes around circumference evenly spaced, one-half inch deep.

1. Insert in each hole a pin, dowel or deheaded nail, 2.5" long and .125" Ø.
2. Use #26 or #28 DCC wire.
3. Wind end of wire around one pin for security leaving 6" free.
4. Start winding around the disc, skipping every two pins or dowels.
5. After 20 turns for the Pick-Up coil, make a loop, which may later be cut to make leads.
6. Continue winding in the same direction for 25 turns, and bring out abother loop. This is the middle sexion of the Plate coil.
7. Continue winding for 55 turns, leaving 6" of free wire at the end. This is the Grid.
8. The wound "diamonds" may be secured with string woven in-and-out among the windings, or by a little colloidon.

RF TRANSFORMER:

Consists of two diamond-weave coils mounted vertically and spaced .250" apart. The same form as above may be used.

1. Using #24 DSC wire, wind 60 turns, with a loop or tap brought out at the 20th turn.
2. Wind another coil with 70 turns, which will be the SEC,

A.J.HAYNES' "DeLuxe" SUPER-HETERODYNE, 1924; Sht.3

Panel = 7" x 18". Baseboard = 9.5" x 17".

OSCILLATOR COUPLER WINDING DATA:

Winding form made of wood, 1.5" in diameter, around the circumference of which 15 holes are drilled equally spaced, to a depth of .5".

In each hole a dowel is inserted, .125" in diameter, and 2.5" in length.

Use #26 or #28 DSC wire. Start by taking a turn around one pin, skip two pins, wind around the fourth pin, skip two pins, etc., etc.

After winding 20 turns for the pick-up coil, make a loop. which will be made into two leads later.

Continue winding in the same direction for 25 turns, bring out another loop; this middle sexion forming the plate coil.

Continue the winding for 55 turns and an end wire for a few inches; this outside sexion forming the grid of the oscillator.

Secure the windings with thread or colloidan. When coil is rigid enough, remove pins and remove coil.

RF TRANSFORMER COIL DATA:

The same form is used to make two diamond-weave coils. Use #24 SCC wire, 60 turns for the primary, with a tap at 20 turns. The SEC is 70 turns of the same wire. Coils are mounted vertically, .250" apart.

* * *
* *
*

A.J.HAYNES' "SIMPLIFIED" SUPER-HET", 1923

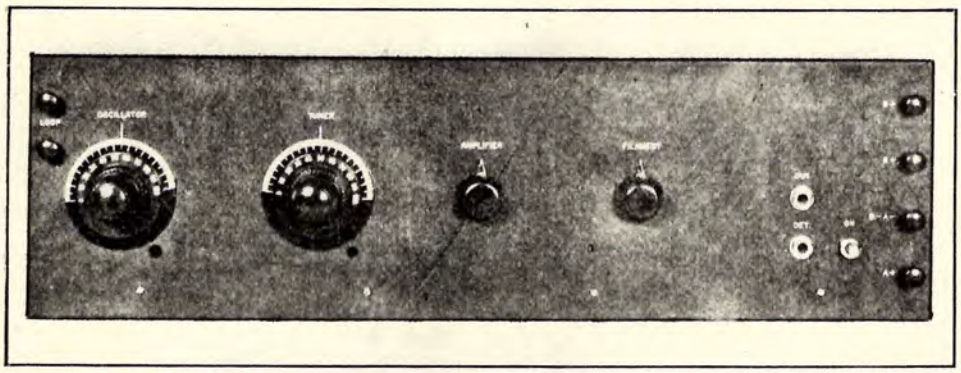

A.J.Haynes was not a very gregarious individual, but he was quite clever and obsessed with Radio. His earlier trials and tribulations are listed in Volume I.

This "simplified" super-het kit was the first to be offered the home-constructor in 1923, and thereby starting a craze that is still with us. If Scott was responsible for inventing pictorialised wiring diagrams, in the same year, Haynes must be creditted with the rise of such Heathkit, Eico, Precision, Moss, and a dozen other electronic kit manufacturers, within our own time.

This "simplified" super-het does work to a surprising degree, even though there is nothing exotic about the circuitry. The Haynes-Griffith transformers, however, were mandatory.

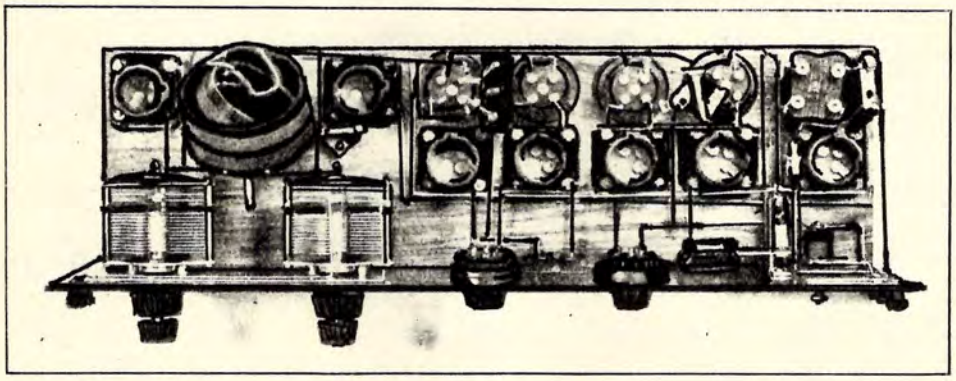

.$72.13

A.J.HAYNES' "SIMPLIFIED" SUPER-HET, 1923; Sht.2

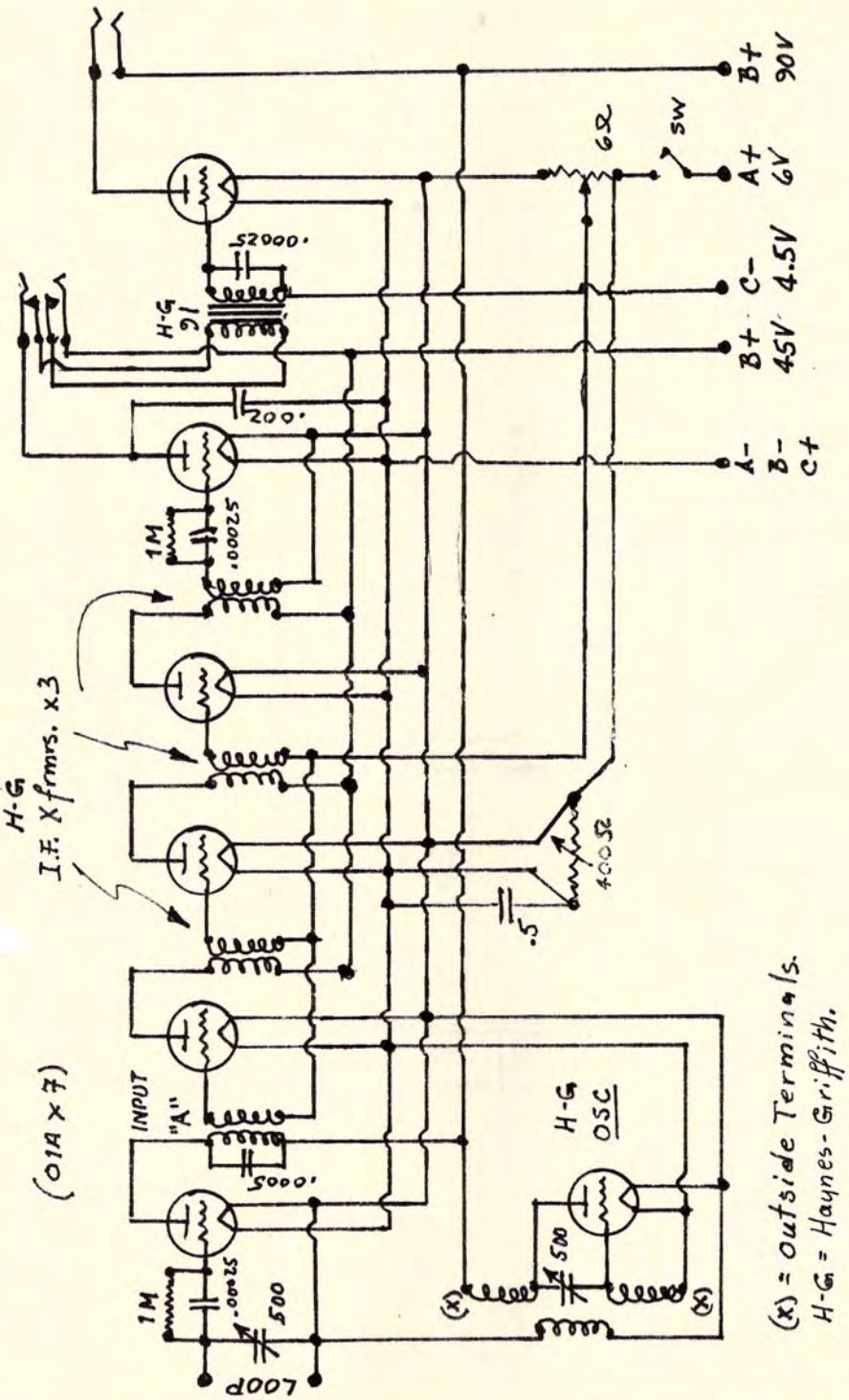

"HETRO FIVE" SUPER-HET, 1925

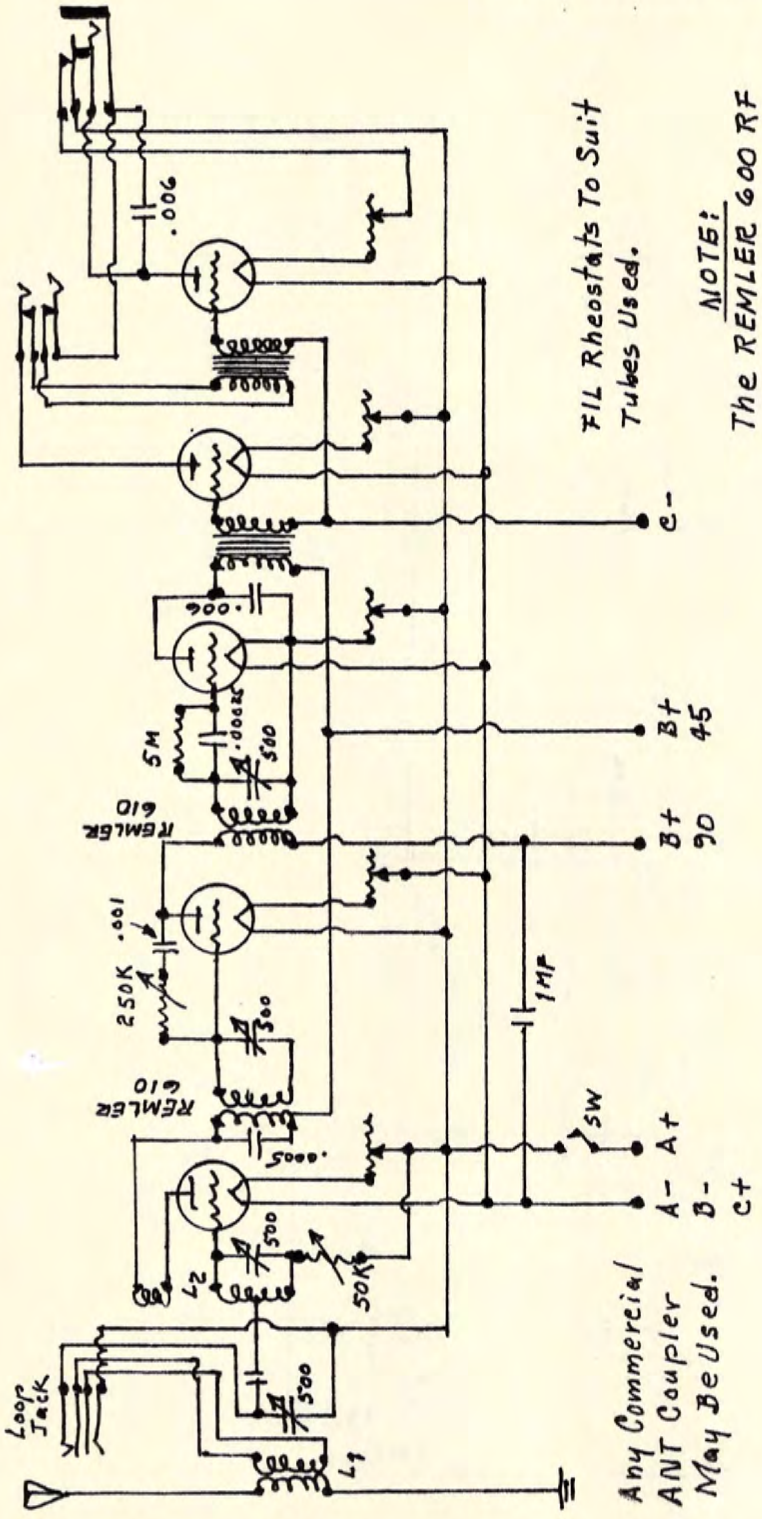

Any Commercial ANT Coupler May Be Used.

FIL Rheostats To Suit Tubes Used.

NOTE: The REMLER 600 RF Xfrmrs. Cannot Be Used w/ This Circuit.

OSC COIL DATA: (L_2)
Pl Coil = 18T, #28 DSC.
Grid Coil = 47T, #28 DSC, Tapt @ 23½ T.
Form = 2 5/8" ϕ.

Sponsored By "The Chicago Evening Post"; designed by G.E. Butterfield, Radio Editor.

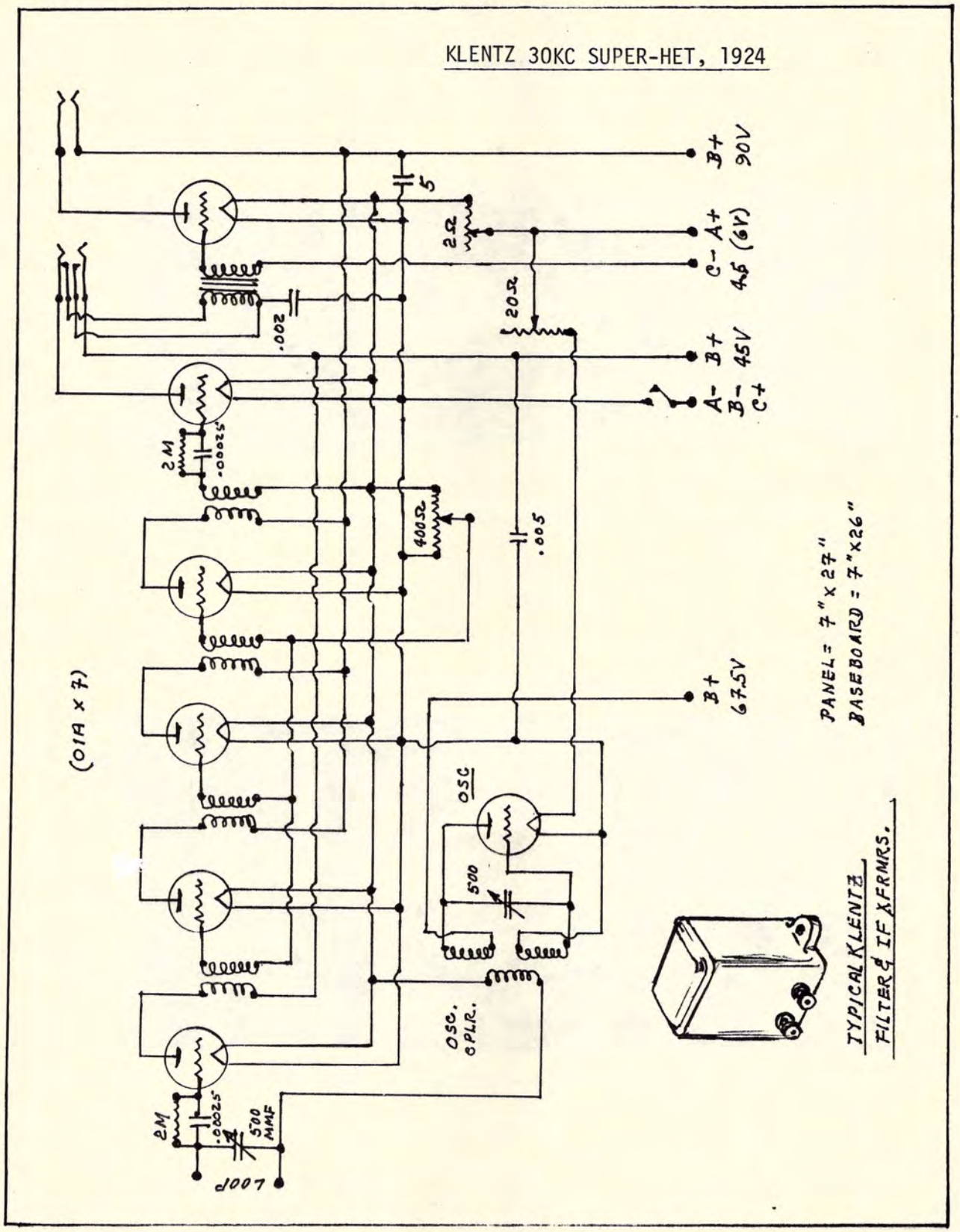
KLENTZ 30KC SUPER-HET, 1924
B+ 90V
C- A+ 4.5 (6V)
B+ 45V
A- B- C+
B+ 67.5V
5
2Ω
20Ω
.002
2M
.00025
400Ω
.005
(01A x 7)
OSC
500
OSC. OPLR.
2M
.00025
500 MMF
LOOP
PANEL = 7" x 27"
BASEBOARD = 7"x26"
TYPICAL KLENTZ
FILTER & IF XFRMRS.

KLENTZ 100KC SUPER-HET, 1927; Sht. 1

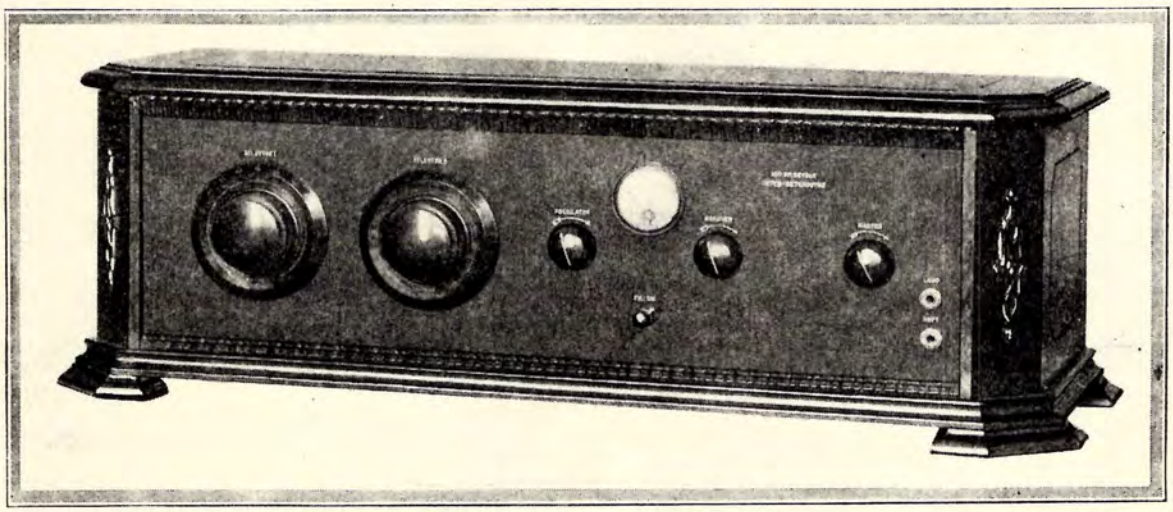

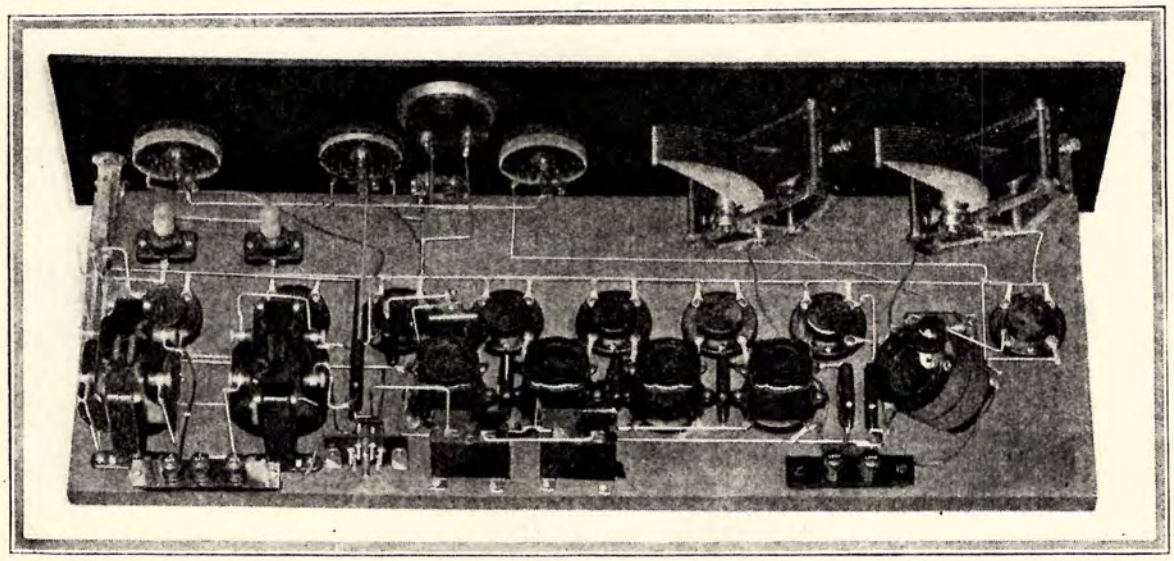

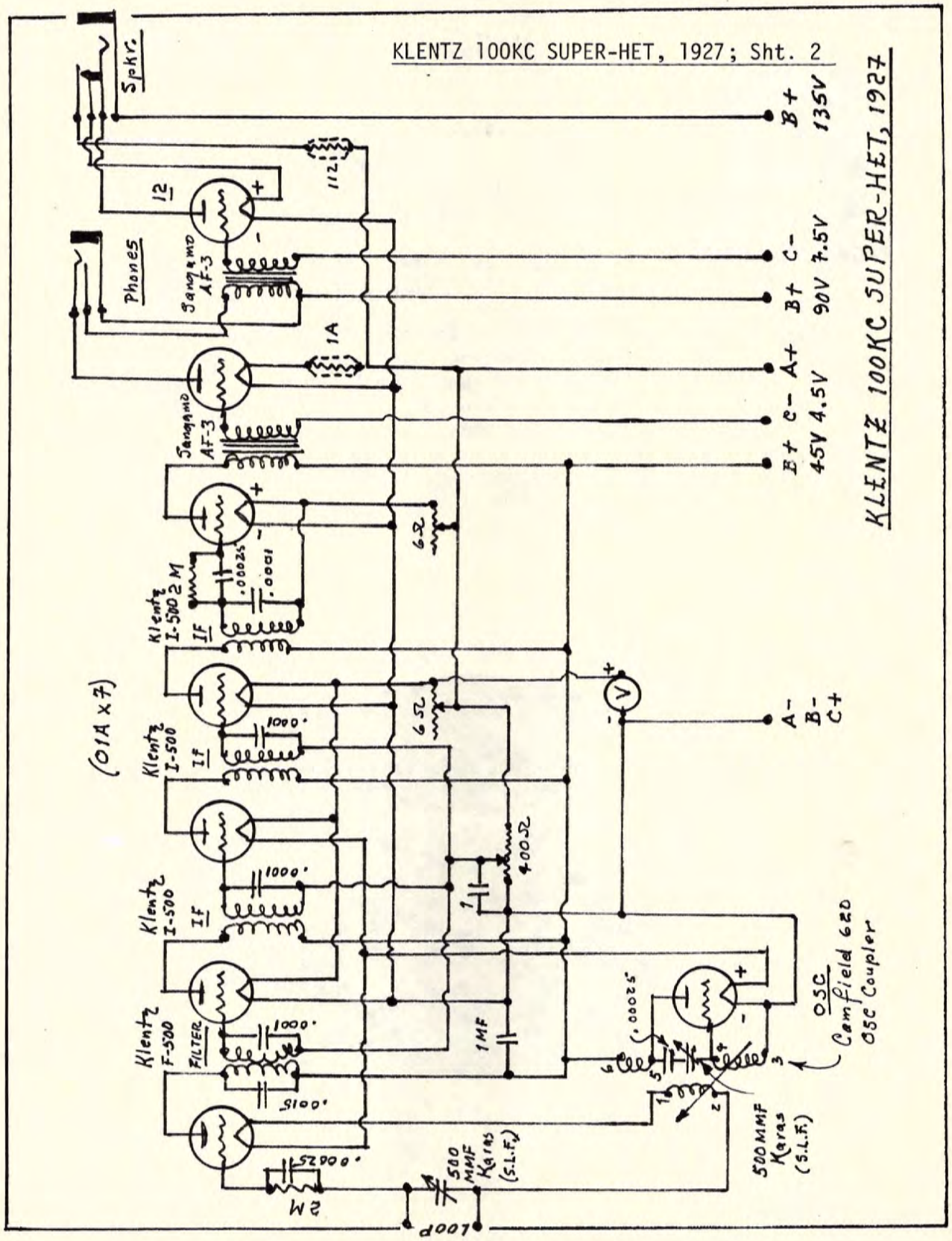
KLENTZ 100KC SUPER-HET, 1927; Sht. 2
KLENTZ 100KC SUPER-HET, 1927
Spkr.
Phones
12
Sangamo AF-3
Sangamo AF-3
1A
112Ω
B+ 135V
B+ C- 90V 7.5V
A+ 4.5V
B+ C- 45V
A- B- C+
(01A x 7)
Klentz I-500 2 M
IF
.00025
.0001
6Ω
Klentz I-500
IF
1000
6Ω
Klentz I-500
IF
1000
400Ω
Klentz I-500
FILTER
1000
.0015
1MF
OSC
Camfield 620
OSC Coupler
.00025
500 MMF Karas (S.L.F.)
500 MMF Karas (S.L.F.)
.00025
2M
LOOP

KLENTZ 100KC SUPER-HET, 1927; Sht. 3

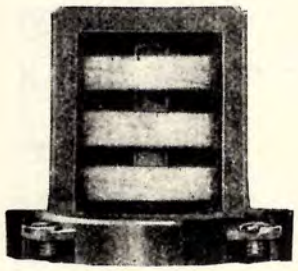

Sectional View

The KLENTZ RADIO COMPANY of Chicago had their brief hour in the sun with the offering of their 100KC transformers. The units were of excellent quality and performed well.

However, aside from their one attempt to design a circuit around their transformers, KLENTZ went back to manufacturing components and accessories for other, after selling the manufacturing rights for their transformers to others, who promptly put their names on them, with never a credit line to KLENTZ. It was ever thus.

The cut below reflects something of the quality of the units, as is full-scale.

Cut Shows Transformer Full Size. Notice Short Connection to Socket

LaPEER AR-9 SUPER-HET, 1927; Sht. 1

The LaPeer super-het was fairly conventional for the times, with a couple aspects considered different. While the adverts contained the usual pufferisms, they merit attention.

They offered an improved double-detection system and a revival of the "D"-coil. The use of the "D"-coil was peculiar to LaPeer. They were also the first advocators of the new composition panel material known as "Celeron", invented by the Celeron Company of Bridgeport, Penna. Its chief claims to fame was that it would not fade, blister, warp, dimple under screw-heads, or lose its lsutre - all of which could happen with the popular Bakelite, in time. It guaranteed to not being susceptible to "cold flow" under screw pressure.

The LaPeer AR-9 used off-the-shelf components, such as Remler, Carter, Muter, S-M, and like most kit-manufacturers built their circuit around their own oscillator and IF coils. The IF coils were of the "D"-coil type. For a detailed analysis of the "D"-coil, refer to Volume VII.

LaPEER AR-9 SUPER-HET, 1927; Sht. 2

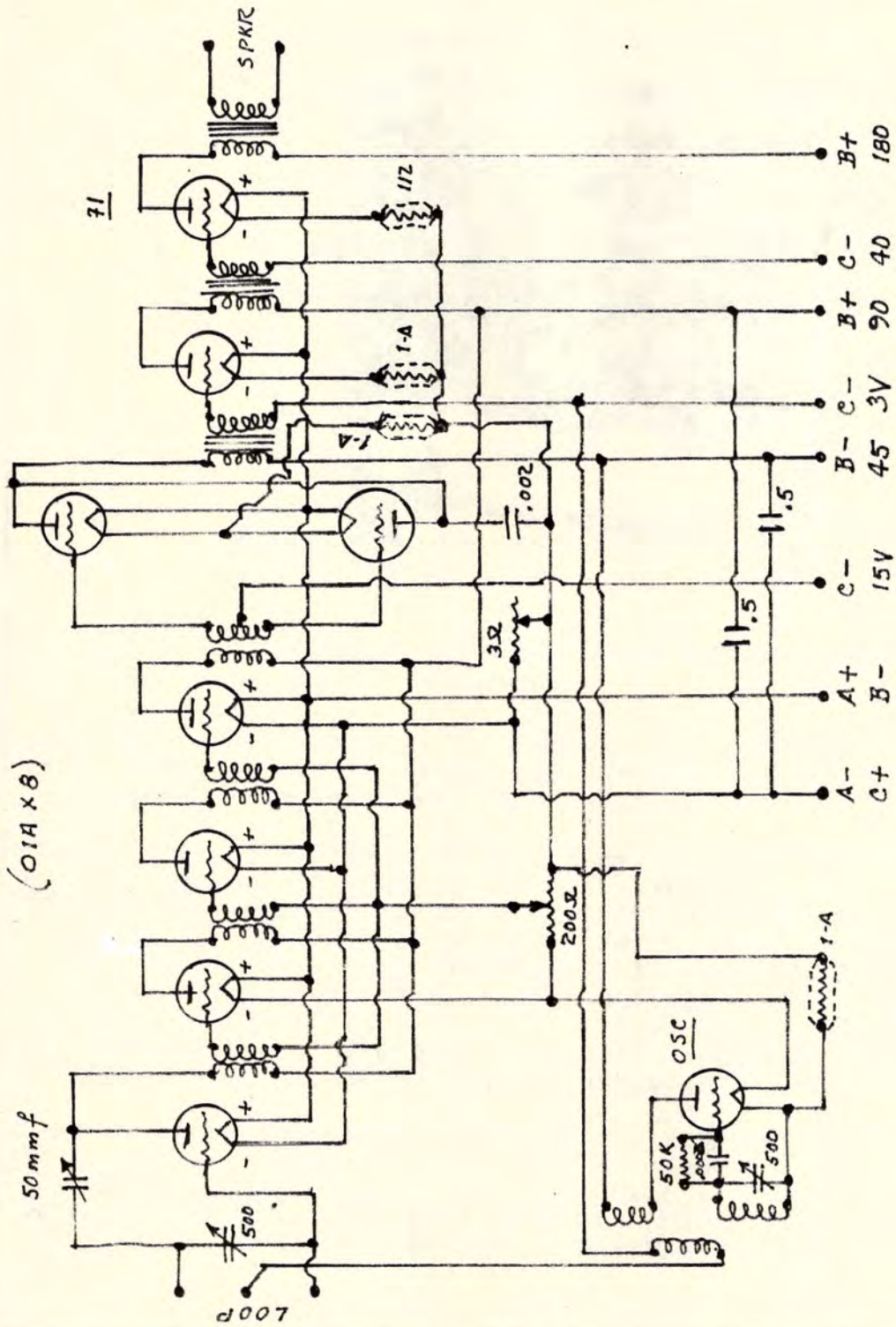

LaPEER AR-9 SUPER-HET, 1927; Sht. 3

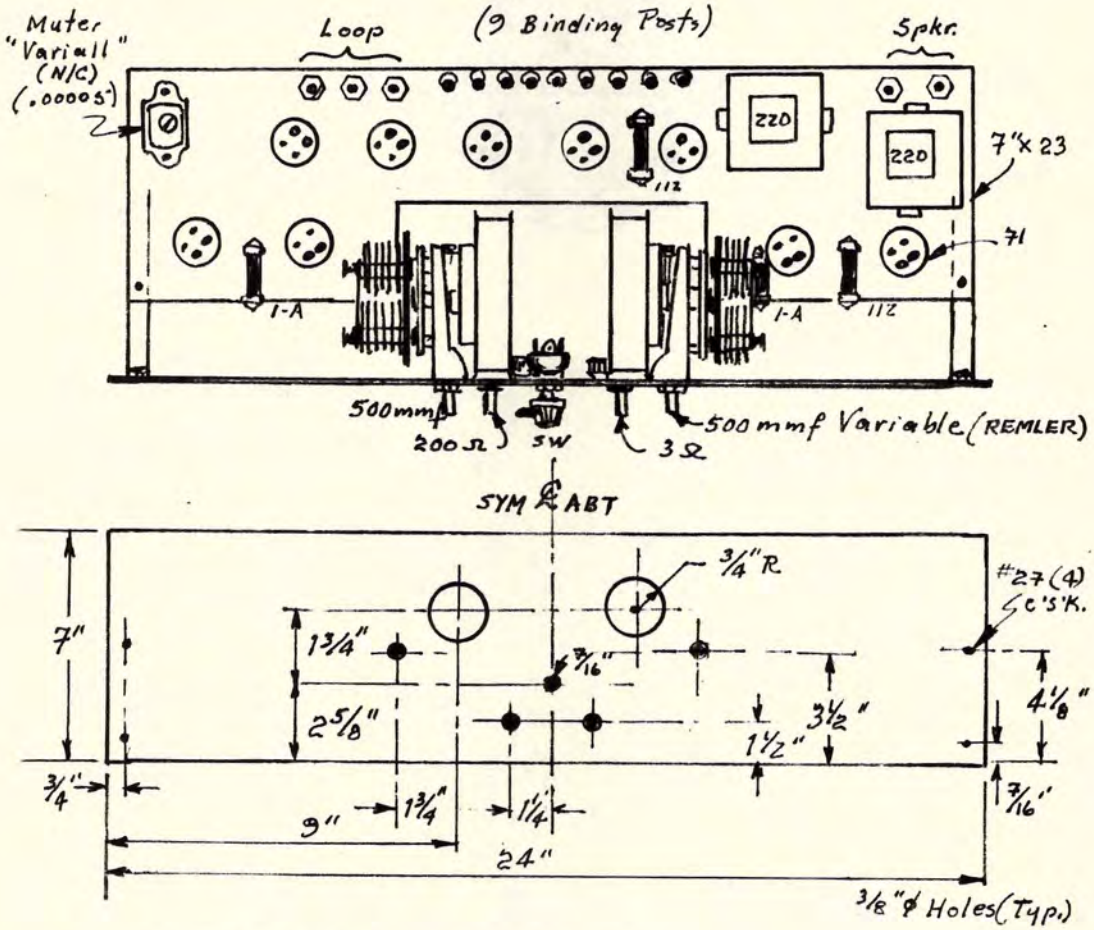

Mounted Under Sub-Panel:

1. AF Output Xfrmr.
2. Grid-Leak Assy.
3. "D"-Coil Oscillator Cplr.
4. "D"-Coil I.F. Xfrmrs.
5. .002 MF Condenser.
6. .5 MF Condensers (2).
7. Sub-Panel Brackets (2).

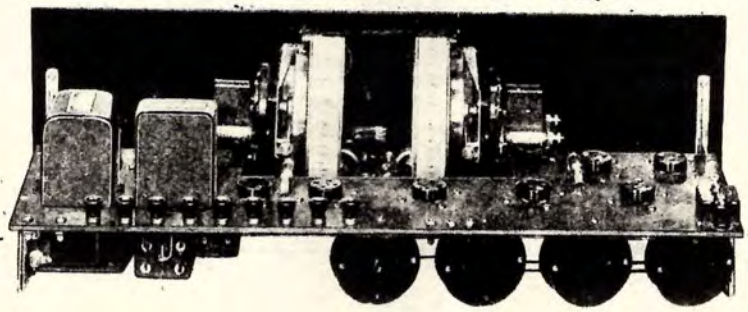

The Lincoln Radio Company of Cleveland were said to be the first manufacturer to offer indivudally tuned RF transformers. Well-made and thoughtfully designed, they made a pleasing appearance when lined up on a baseboard.

It was their long wave transformers, or coils, which gained them a couple years popularity with the home-constructor, and their super-het circuitry was more or less conventional.

In 1927, however, public notices were published stating that the Rex Labs of Cleveland had acquired all patents rights, trade-marks, etc., of the Lincoln Radio Company. The Lincoln "DeLuxe 10" of 1929 was their last offering.

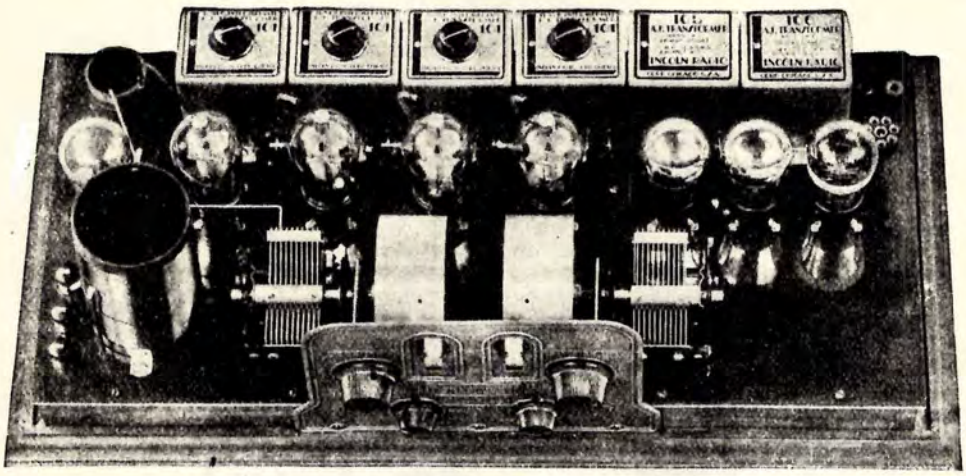

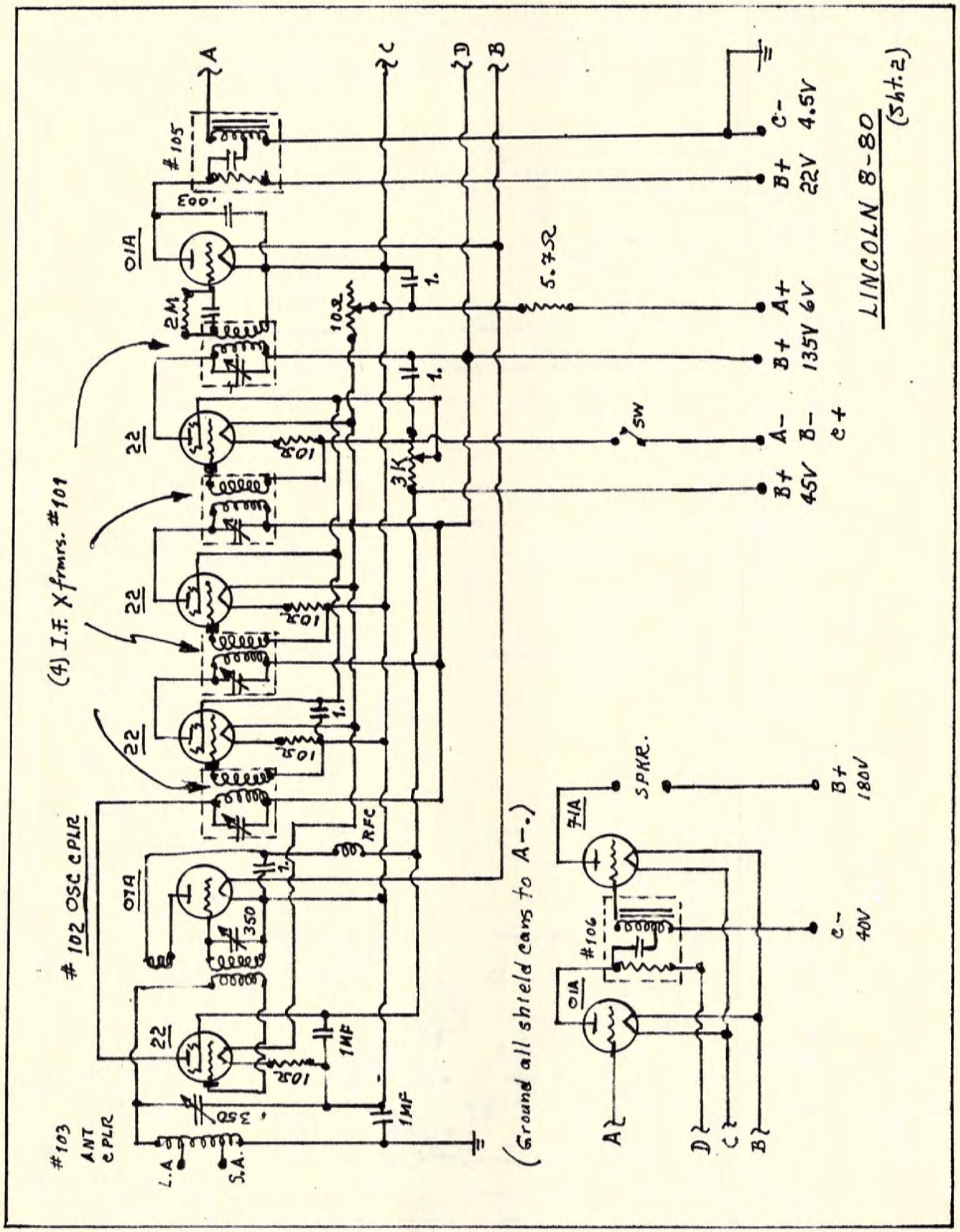
LINCOLN 8-80
(Sht. 2)
(4) I.F. Xfrmrs. #101
102 OSC cPLR
#103 ANT cPLR
#105
#106
(Ground all shield cans to A-.)
SPKR.
SW
RFC
L.A.
S.A.
A
B
C
D
C-
B+ 22V
4.5V
A+ 6V
B+ 135V
A- B-
B+ 45V
c+
B+ 180V
c- 40V
01A
22
74A
5.7Ω
10Ω
3K
1MF
350
.003
2M

LINCOLN SUPER EIGHT, 1928; Sht. 1

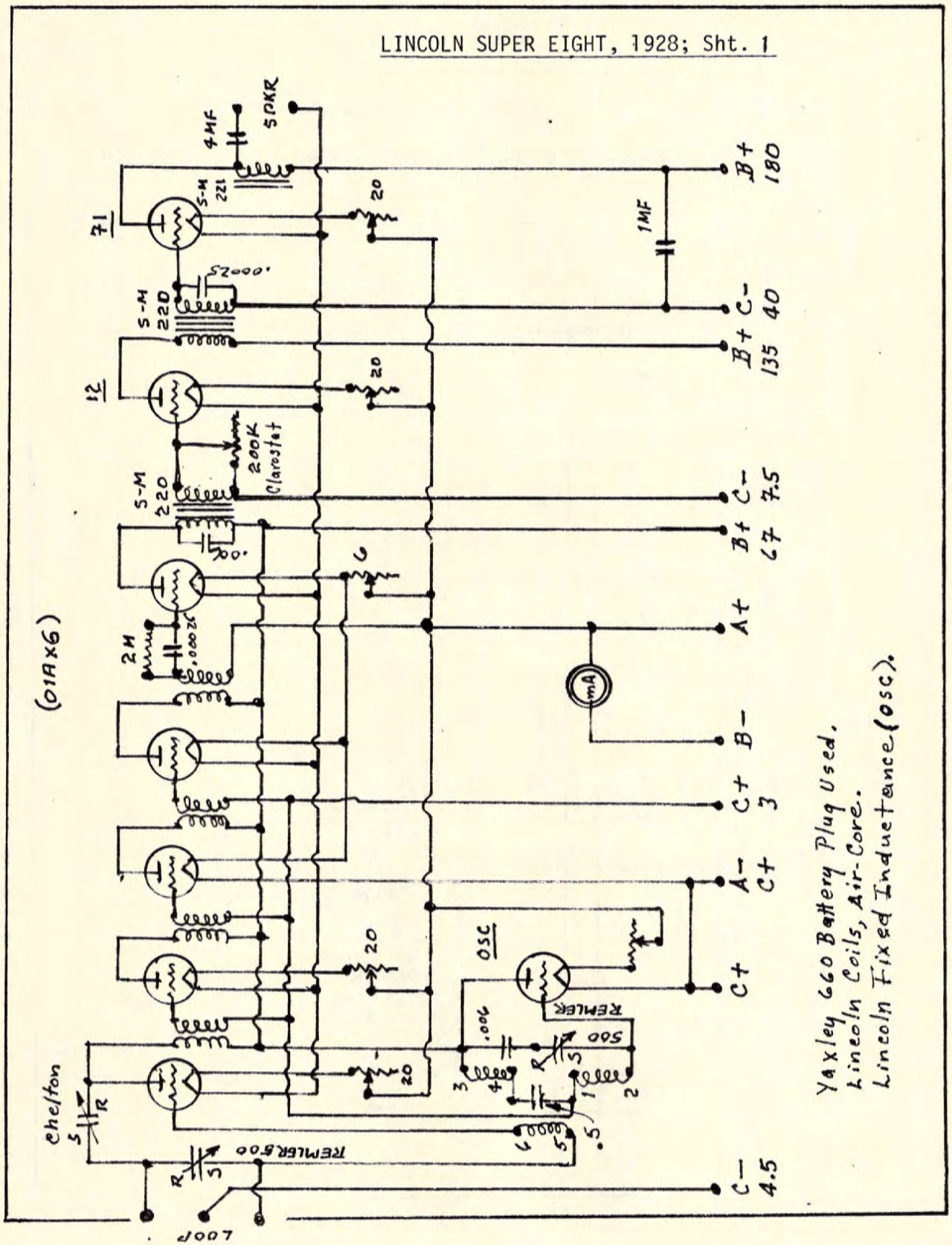

LINCOLN SUPER EIGHT, 1928; Sht. 2

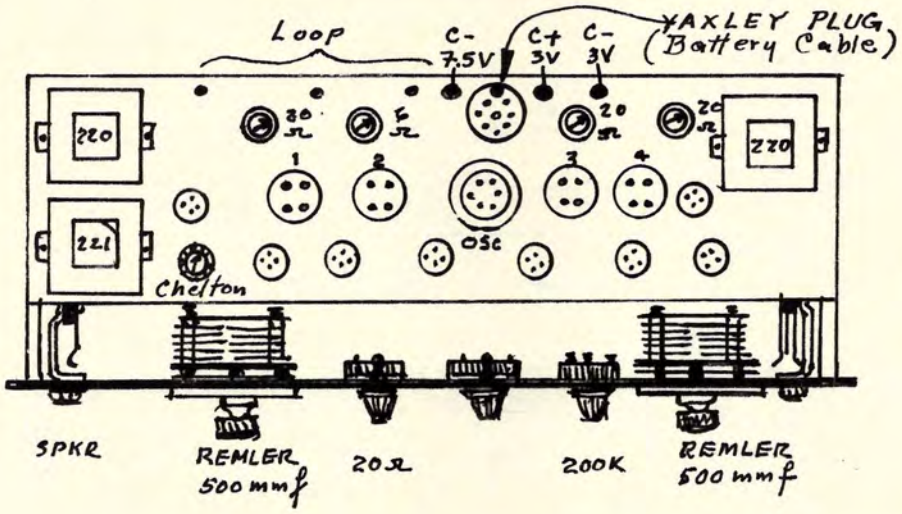

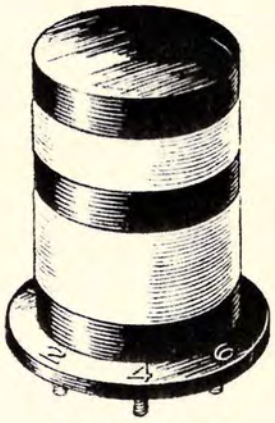

The Lincoln-Fixt Inductance

The Lincoln Transformer

QUALITY PRODUCTS

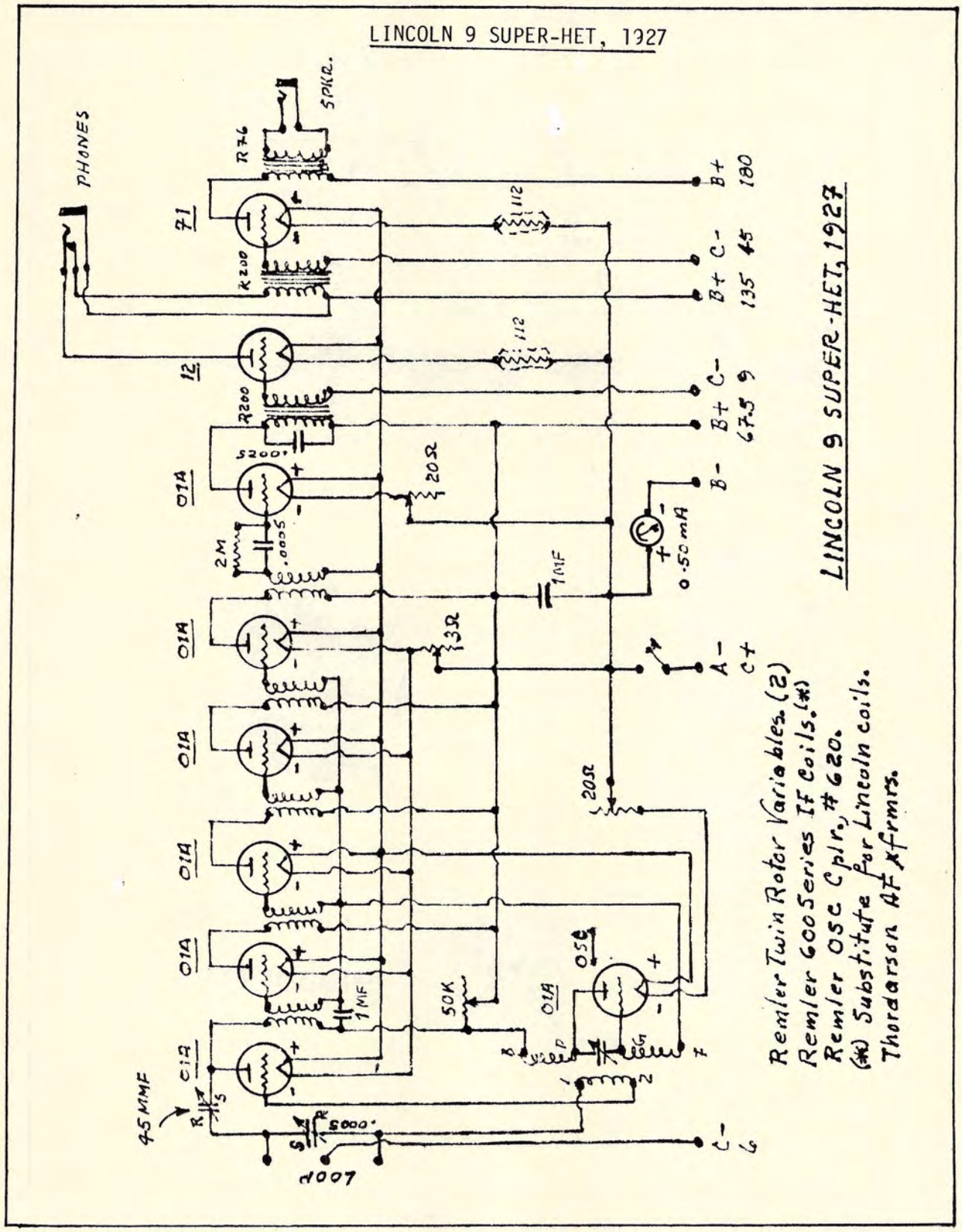
LINCOLN 9 SUPER-HET, 1927
PHONES
SPKR.
R76
71
R200
12
R200
S200
01A
2M
.0005
01A
01A
01A
01A
01A
01A
45 MMF
.0005
1007
1 MF
50K
20Ω
3Ω
1 MF
20Ω
0.50 mA
112
112
B+ 180
B+ C- 45
B+ C- 135
B+ 67.5
B-
A-
C+
C-
LINCOLN 9 SUPER-HET, 1927
Remler Twin Rotor Variables (2)
Remler 600 Series IF Coils (*)
Remler Osc Cplr., #620.
(*) Substitute for Lincoln coils.
Thordarson AF xfrmrs.

The Lincoln De Luxe 10

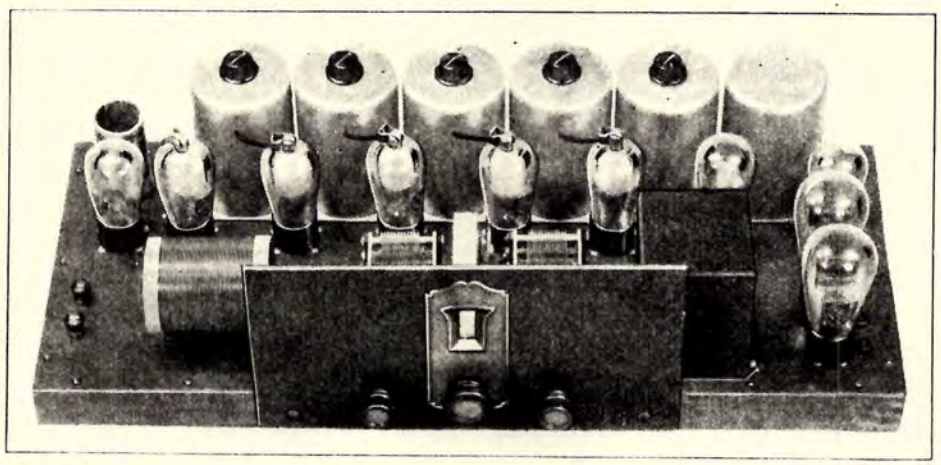

The "DeLuxe 10" was Lincoln's most elabourate and last effort, as when the kit had been finally released to the home-constructor, the ripple effect of the '29 Crash was catching up with them, along with others.

The circuitry was a natural evolution of the basic circuit of 1927, and they retained the tunable plate inductances feature. They also designed an efficient if un-novel B-eliminator for the receiver.

The IF transformers were new, and contemporary media referred to them as "the highest type of solenoid coils exceeding anything known before". The IF was peaked at 475 KC, and the range was from below 200 meters to 550 meters. The large ANT coil was space-wound, employing #16 enamelled wire. The Bakelite sub-panel was supported by a rigid hardwood frame extending from four sides.

The tuned PRI had a very high impedance, providing a much larger proportion of the voltage generated in the tube across it. This took on significance with screen-grid tubes, as the plate to filament resistances were so high that its effect upon the tuned PRI was negligible.

LINCOLN "DeLuxe 10" SUPER-HET, 1929;Sht.2

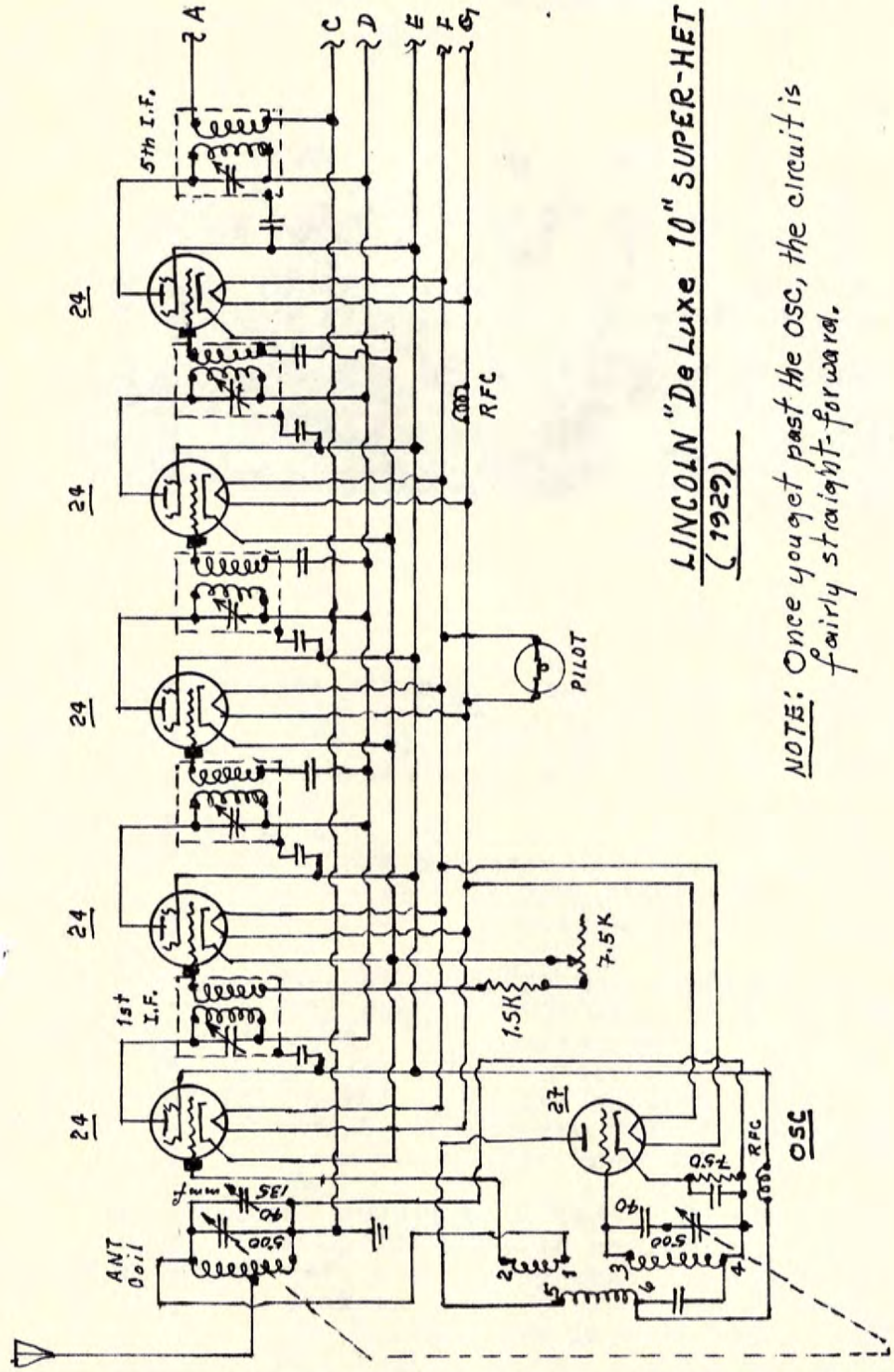

LINCOLN "DeLuxe 10" SUPER-HET, 1929; Sht. 3

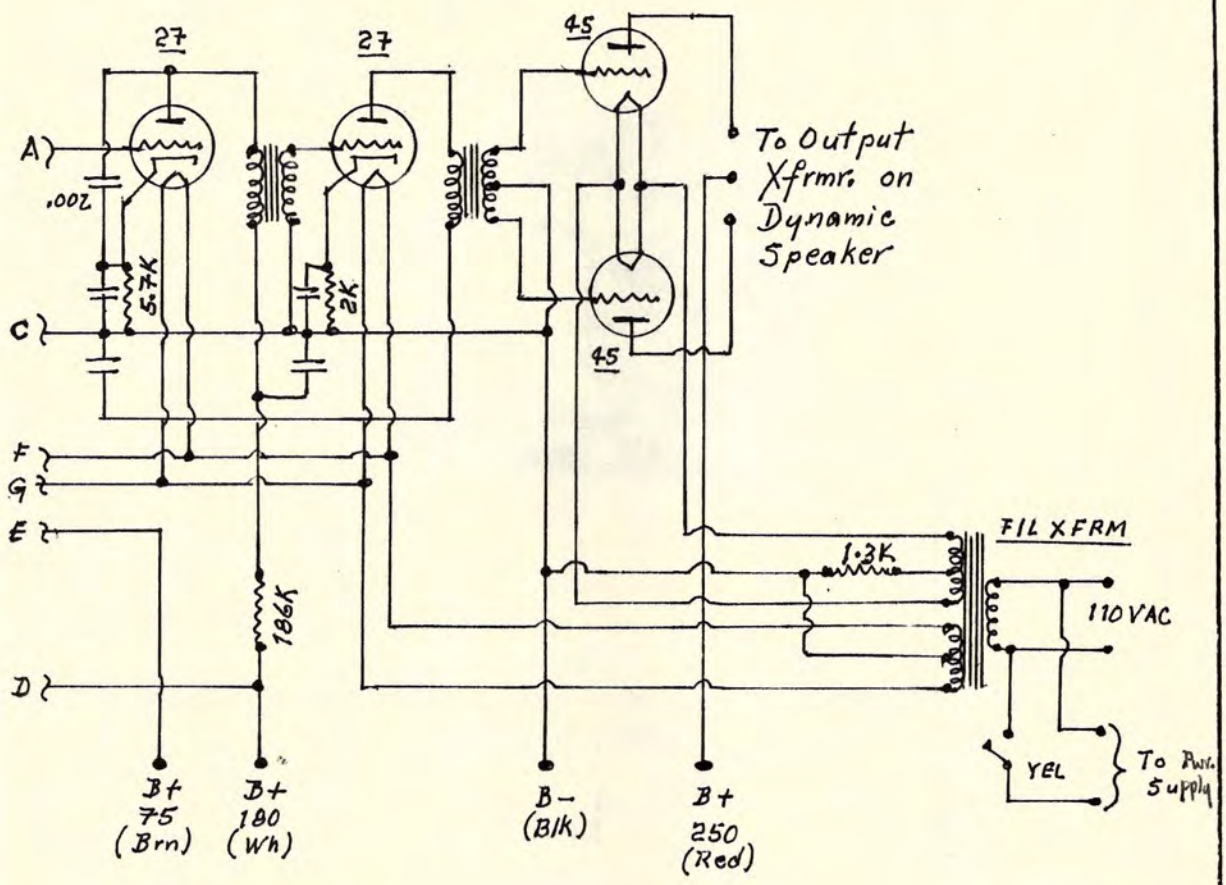

NOTE:

In the Summer of 1930, Lincoln offered the "DeLuxe 31" super-het, which failed to alter flagging sales. The "31" was identical to the "DeLuxe 10", with the exception of replacing the insulated sub-panel with a metal chassis. If you have the "31", the data given for the "DeLuxe 10" will prove extremely useful.

LINCOLN "DeLuxe 10-B" POWER SUPPLY

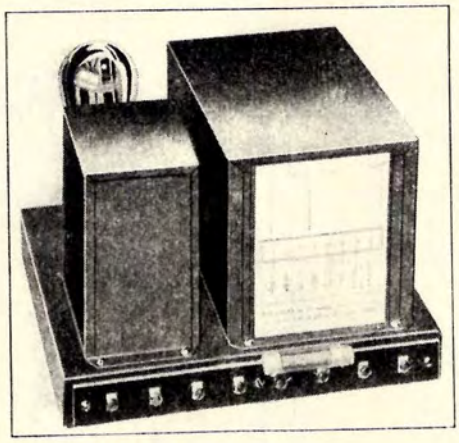

Unit also supplies 150V, 60mA, for Dynamic Speaker Field.

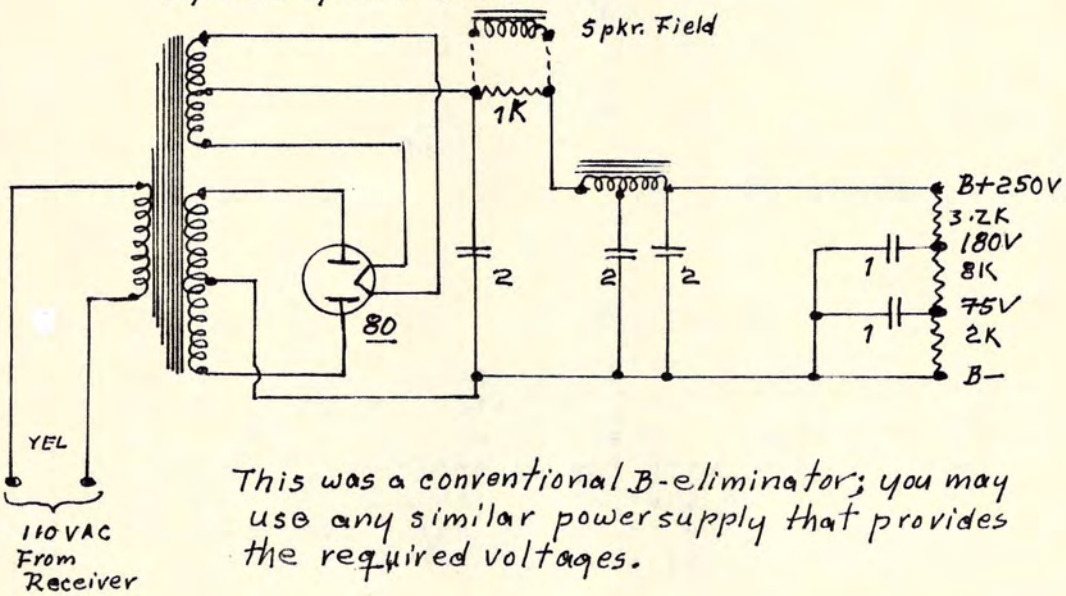

This was a conventional B-eliminator; you may use any similar power supply that provides the required voltages.

THE MAGNAFORMER SUPER-HETS

The MAGNAFORMER super-hets were among the top half-dozen really excellent receivers of the late Twenties. In 1927 alone, the year of their massive popularity, witnessed no less than four versions, each an "improvement". Battery and AC models were offered, both of which you will find here.

The coils were extremely well-made and thoughtfully engineered, albeit a bit over-sophisticated for the times. And the MAGNAFORMER coils could not be replaced with other coils with impunity, as could be done with other circuits.

If you have the battery model MAGNAFORMER and would like to convert it to AC operation, it will be probably the simplest conversion ever offered. A change of sockets and the inserting of a potentiometer, and that all there is to it. The sockets would require re-wiring for the cathodes of the 27s, and 12 gauge wire was and is recommended. The original AC sockets were Benjamin 9037, although any under-chassis sockets of the period will do as well, such as those by Eby or Pilot.

All versions of the MAGNAFORMER incorporated the old Federal "anti-capacity" switch, 1424. This was a selling point in the early adverts, in that you could cut in-or-out the 3rd IF stage, and operate the set as an 8-tube receiver. The advantage, at the time, was that the switch allowed you you to diminish the blanketting effect of a strong local station when you were pulling in a weaker signal.

The windings of the MAGNAFORMERS, both PRI and SEC, were impregnated with wax, theoretically sealing them from moisture, humidity, other climatic changes. This immediately suggests that if you have an open MAGNAFORMER, you cannot resort to the tradtiioanl method of trying to sintre the break with excessive voltage.

The SEC winding was tuned exactly to 67.73 KC, about 4300 meters. The coils were "aged" in two operations before being offered the home-constructor, and their accuracy was impressive by the standards of the say. The 200K variable resistor added for the AC version should be capable of passing at least 25 mA. The power supply should have a PRI winding of at least 50-ohms, and robust enough to pass 1A. The original MAGNAFORMER power supply is sketched herein, but it was un-necessarily complex and a more conventional power amplifier

is recommended - unless, of course, you are a purist and have the MAGNAFORMER, or the kitted parts, and want to make everything original.

The MAGNAFORMER coils can easily be adpated to most any super-het circuit of the Twenties, and if you have a complete set in working order, you're in for a treat, if you construct a super-het using them.

* * *
* *
*

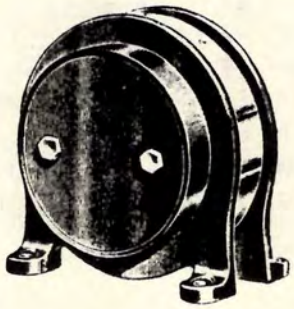

Sealing Disc (8)

Fixed Variable (4)

(6) Metal Shield Enclosure

(1) Bakelite Spool

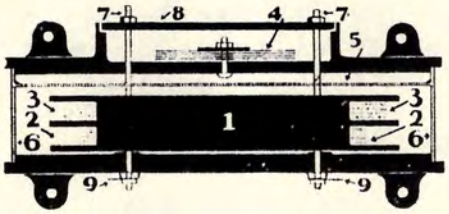

SEC Metal Shield (5)

SEC (3)

PRI (2)

TYPICAL MAGNAFORMER

Soldering Lugs (9)

MAGNAFORMER 8-9 SUPER-HET

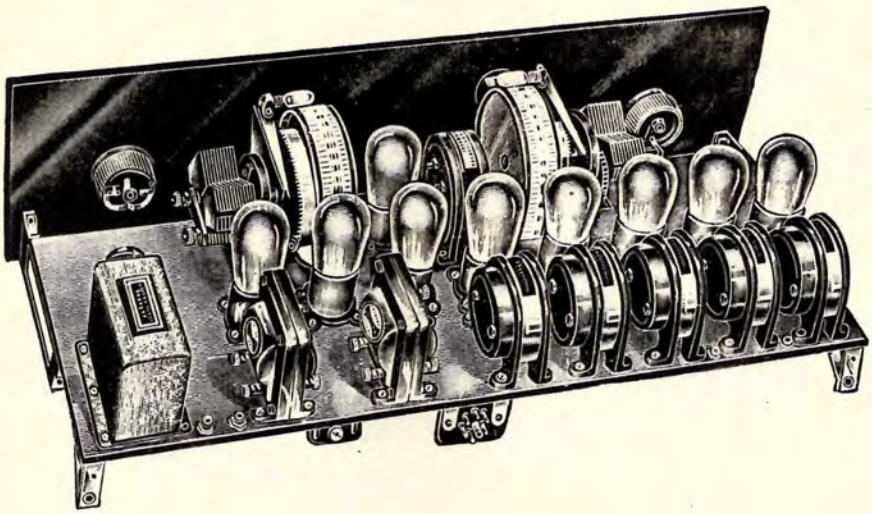

A General Parts List, All Versions:

Formica Panel = 7" x 26".
Formica Sub-Panel = 9" x 25".

Remler 110 Drum Dials (2).
Remler 500 mmf Variables (2).
National Tone Filter.
Magnaformer CU-71 (OSC Cplr.).
Magnaformers RF-61 (5).
Ferranti AF Transformers AF-4 (2).
Samson 185 RFC.
Benjamin Sockets 9037 (8).
Benjamin Socket 9044.
Yaxley Cable Connector.
Yaxley Gold-Plated #60 Jack Switch.

15' #12 or #14 Tinned Acme Wire.
30' Acme "Celatsite" Flexible Wire.

NOTE: The Magnaformer kits were offered by the Radiart Co.

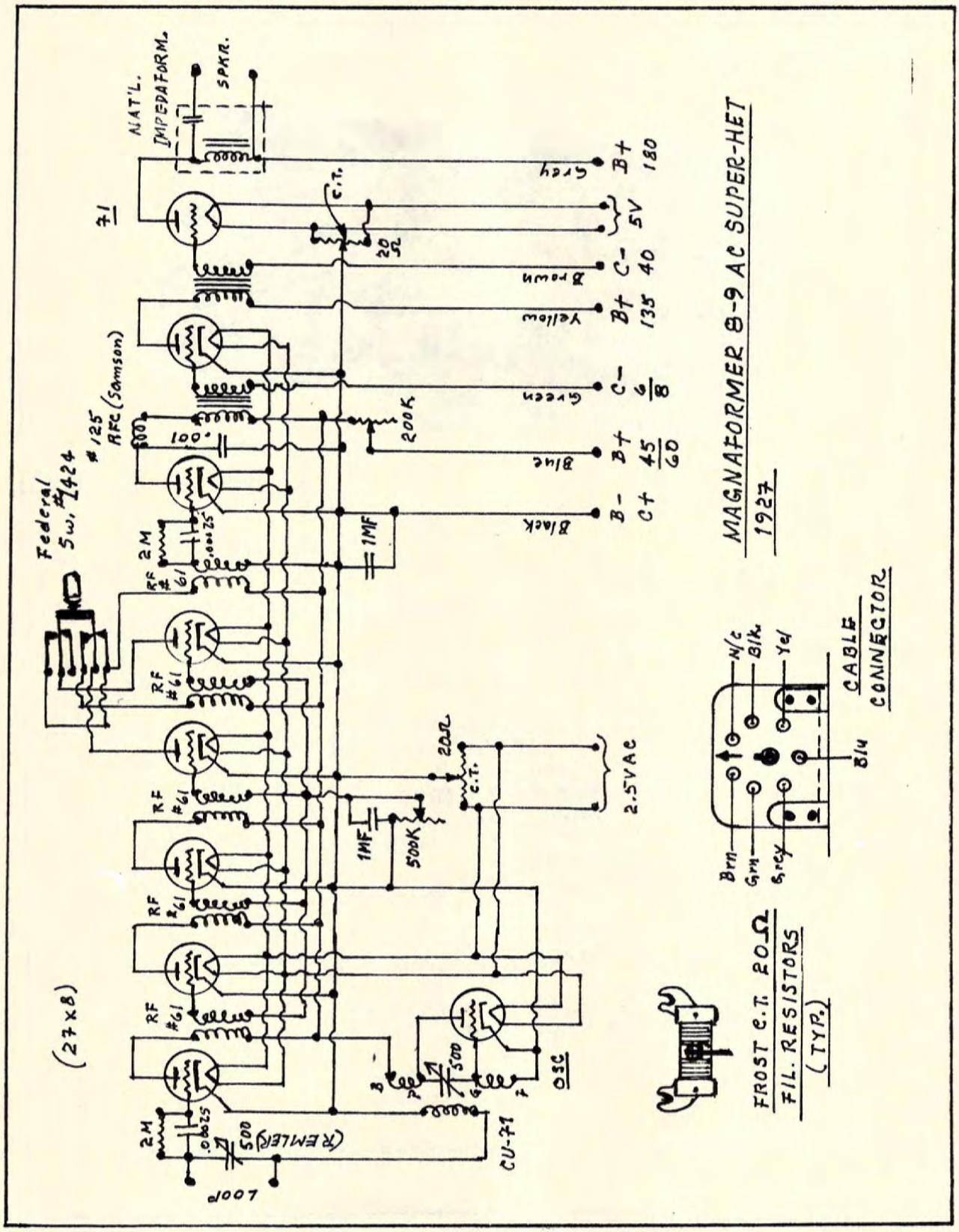
MAGNAFORMER 8-9 AC SUPER-HET
1927
(27 x 8)
Federal Sw. #424
#125 RFC (Samson)
NAT'L. IMPEDAFORM.
SPKR.
71
RF #61
2M
.0025
500
(REMLER)
LOOP
CU-71
OSC
500
1MF
500K
200K
100
.001
.0025
20Ω
C.T.
2.5VAC
Gray B+ 180
5V
Brown C- 40
Yellow B+ 135
Green C- 6/8
Blue B+ 45/60
Black B- C+
CABLE CONNECTOR
N/C
Blk.
Yel
Blu
Brn
Grn
Gray
FROST C.T. 20Ω
FIL. RESISTORS
(TYP.)

MAGNAFORMER 9-8 SUPER-HET VARIANT, 1927

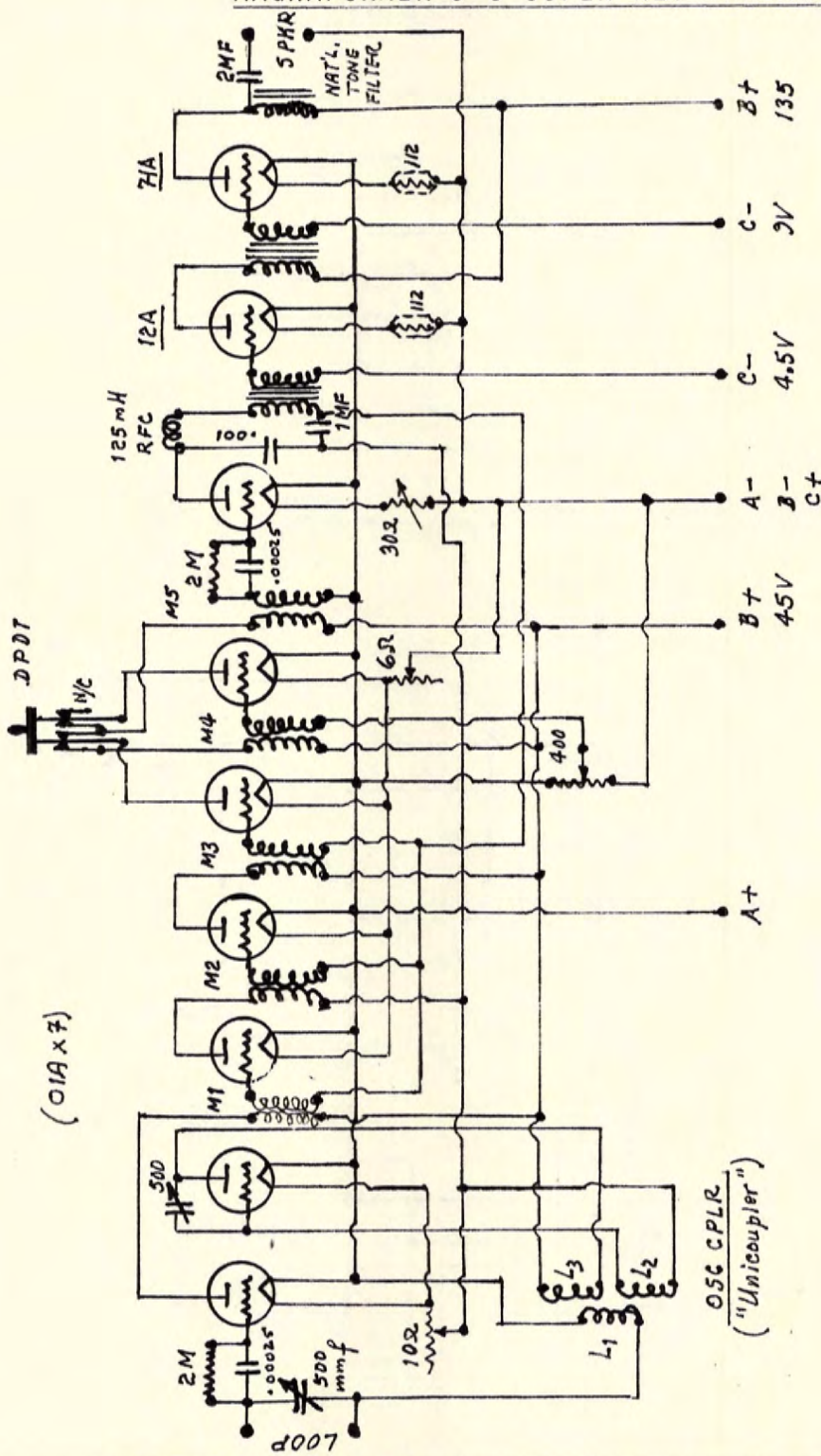

MAGNAFORMER 8-9 SUPER-HET VARIANT, 1927

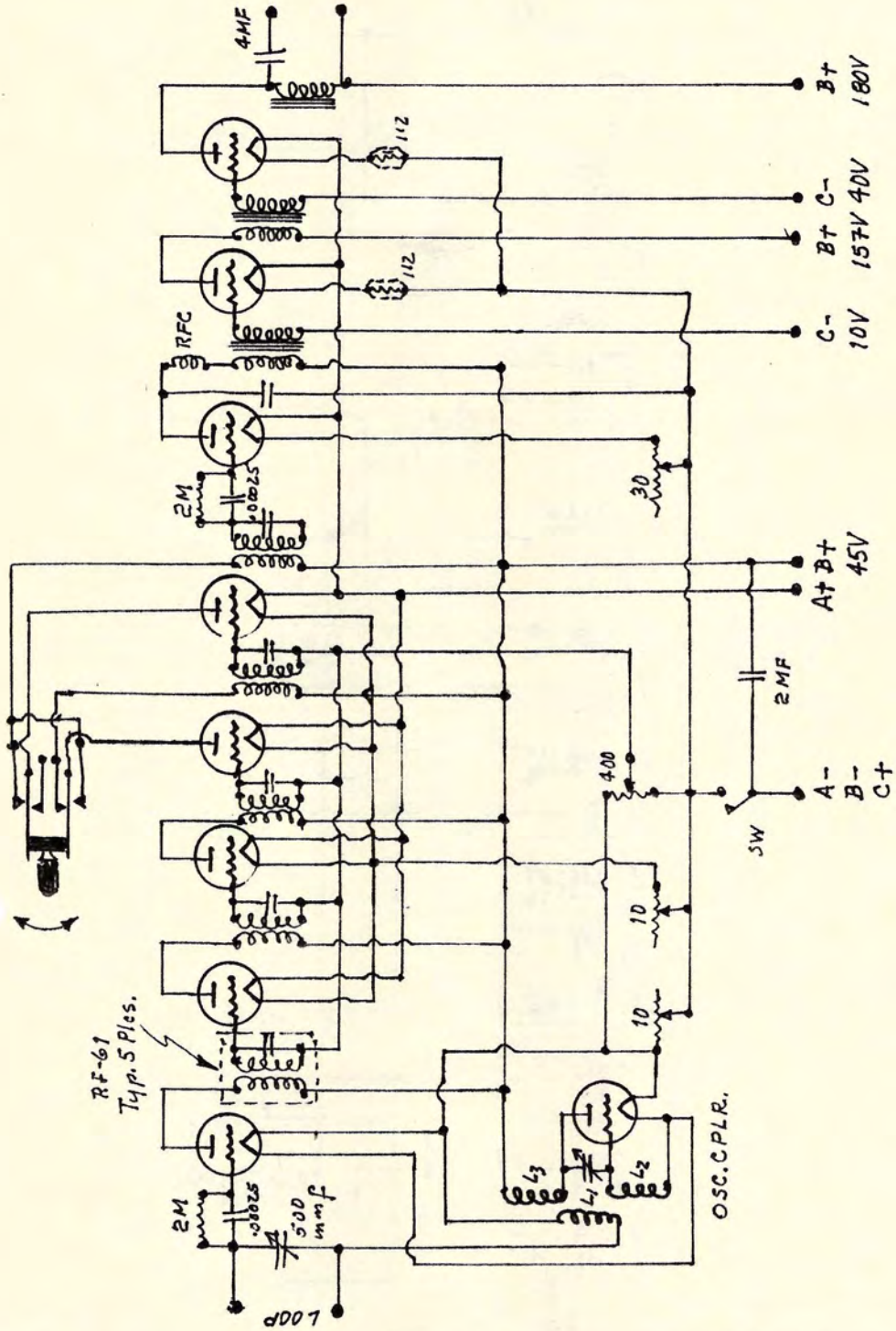

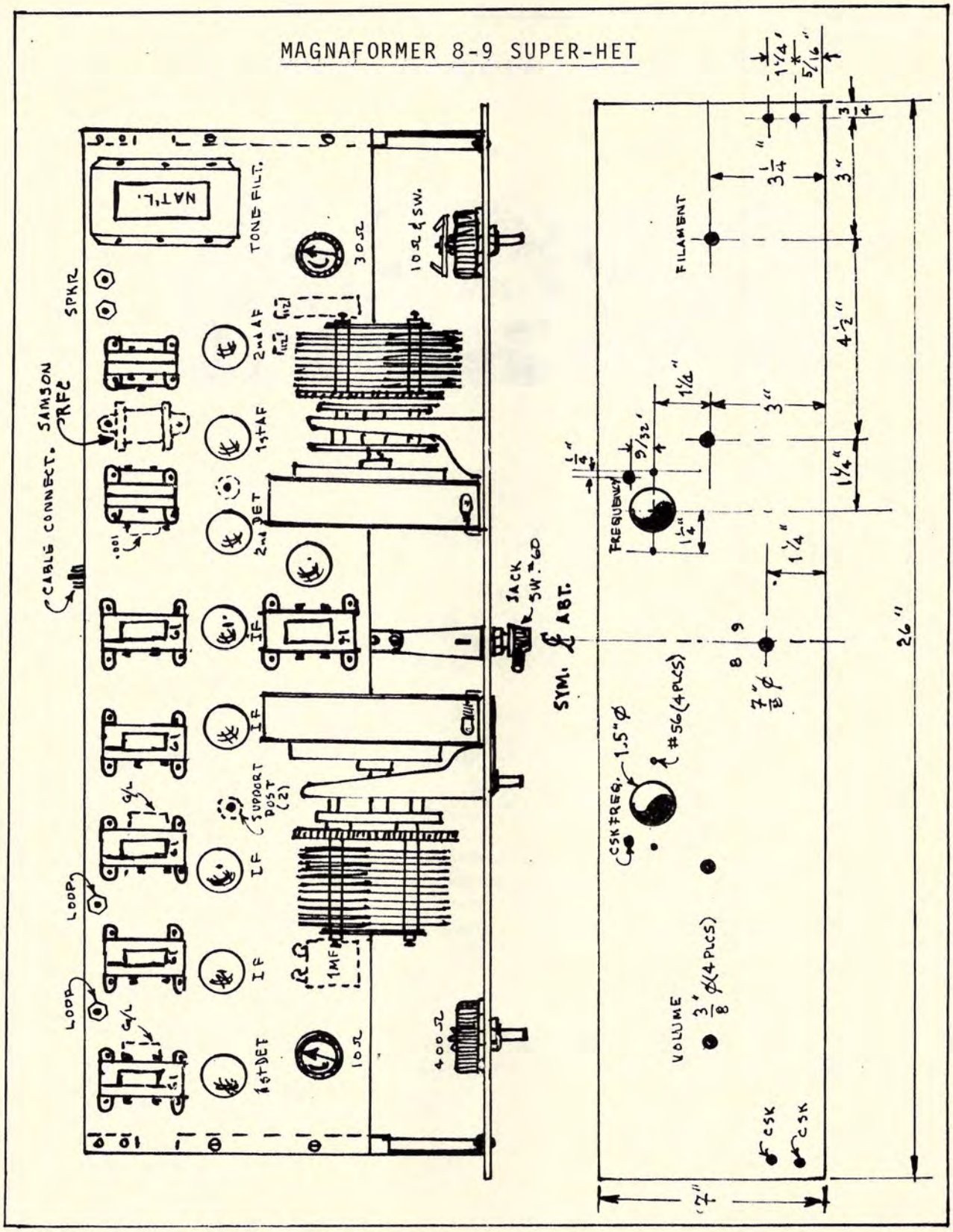
MAGNAFORMER 8-9 SUPER-HET
NAT'L.
TONE FILT.
30Ω
10Ω & SW.
SPKR
CABLE CONNECT.
SAMSON RFC
2nd AF
1st AF
2nd DET
.001
IF
SUPPORT POST (2)
LOOP
1st DET
10Ω
1MF
400Ω
JACK
SW. #6D
SYM. & ABT.
FILAMENT
FREQUENCY
CSK FREQ.
1.5"Ø
#56 (4 PLCS)
VOLUME
3/8"Ø (4 PLCS)
CSK
26"
7"

Magnaformer AC-29

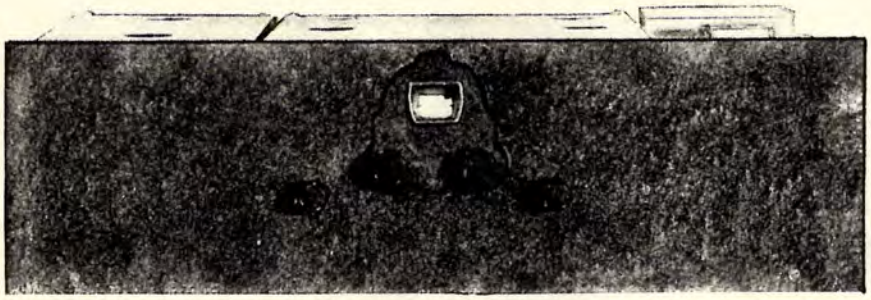

The last "Magnaformer" offered by the Radiart Labs of Chicago was the AC-29. It was a logical and impressive refinement of the very popular Magnaformer 9-8, although it was still a kitted super-het, the over-all cost of a complete kit being approximately $200.

With a sub-panel measuring 12" x 23", it was hardly a midget and the inclusion of the Radiart 55-A power amplifer, it was laso hefty. Screen-grid tubes were used throughout the RF sexion, and the powerful 50 was the audio output, taking 450V on the plate.

Dynamic or PM speakers could be used, and while the circuit was designed for loop operation, two seperate ANT coupling coils were available, one for long waves, the other for short-waves, designated Part No. 82 and 83, respectively. The short-wave OSC coil was #72, the long-wave #71. Radiart called their coils "Unicouplers".

Oddly enough, upon close examination, it would appear that the coils, with their jacks and plugs and mounting strips were made by General Radio, their #274 family of such things. All other hardware and components were of good make, such as Yaxley, Frost, Samson, Aerovox, although any conparable make would work in the set.

The power amplifier was conventional for the time, save in the rather high B+ voltage for the 50 tube, which was considerably higher than most other battery eliminators, save, of course, those built by E.H.Scott - who was beginning to chromium-plate all his chassis.

The Magnaformers were of the top eschalon of kitted super-hets of the Twenties, and merit your attention.

* * *

RADIART "MAGNAFORMER 29" AC SUPER-HET; Sht. 2

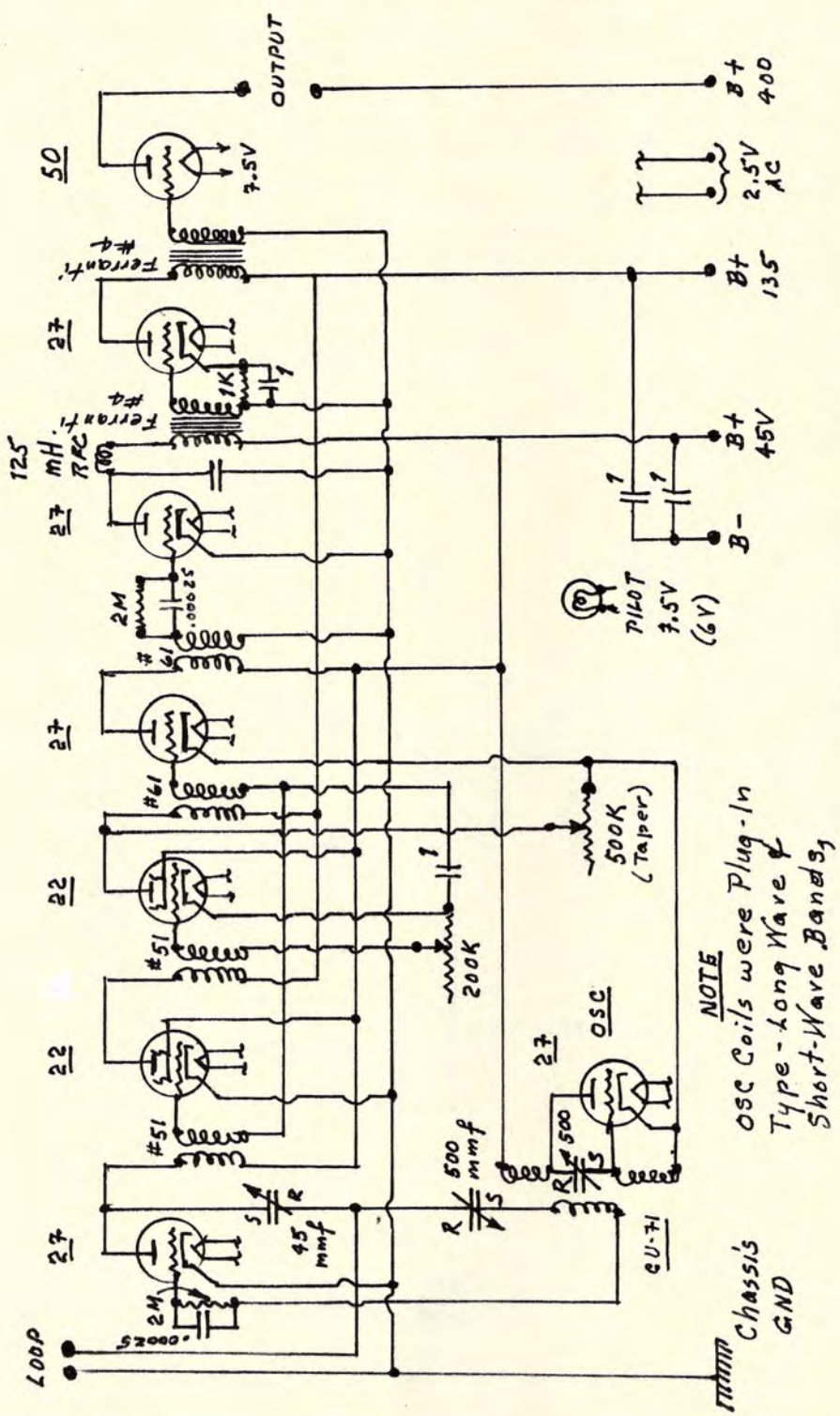

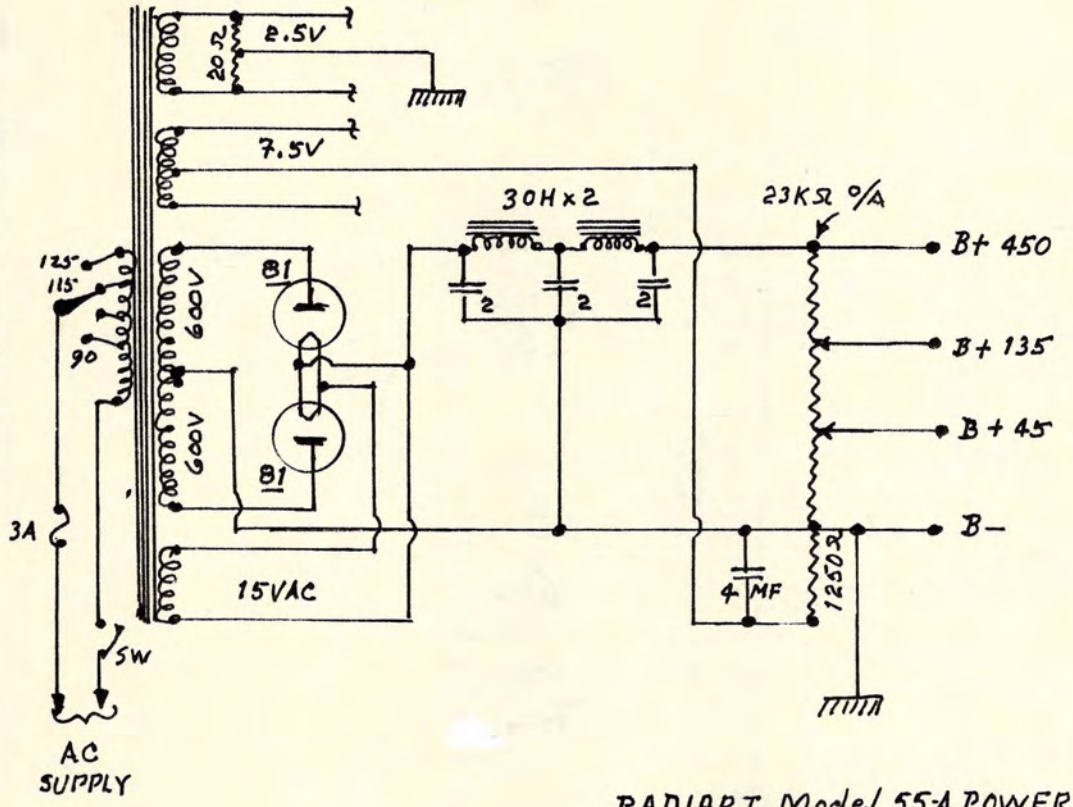

RADIART Model 55-A POWER SUPPLY
(Used w/ the "Magnaformer 29".)

MELO-HEALD "HOT-SPOT ELEVEN" & "FOURTEEN", 1927;1

Robertson-Davis entered the field of home-constructed radios by offering their "Hot-Spot Eleven", guaranteeing that it was a one-spot receiver, which it was. Despite many claims to the contrary, most radios had the habit of finding the same station at two or more points on the dial.

The "Eleven" was followed a year later by the "Fourteen" super-het, and while a very neat set, proved to be a bit too expensive to construct for the average hobbyist. The advanced Robertson-Davis "Automatic Super Six" was even more so.

In the following pages you will find details of both the "Eleven" and the "Fourteen". Like all such receivers, the "heart" of the circuit was in the "Melocouplers" - the R-D IF coils, called transformers. Actually, the circuits may be constructed with IF coils by others, such as Remler or Baldwin-Pacific, but eleven such R-D coils do not often show-up at flea-circuses. Still, they might...

Their adverts stated that the set was quick and simple to build, but they forgot to mention the cost of parts.

Melo-Heald Eleven Receiver

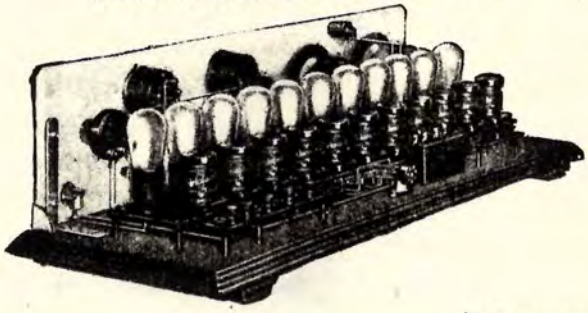

(Merwyn Heald, Designer)

MELO-HEALD "ELEVEN" SUPER-HET, 1927; Sht.1

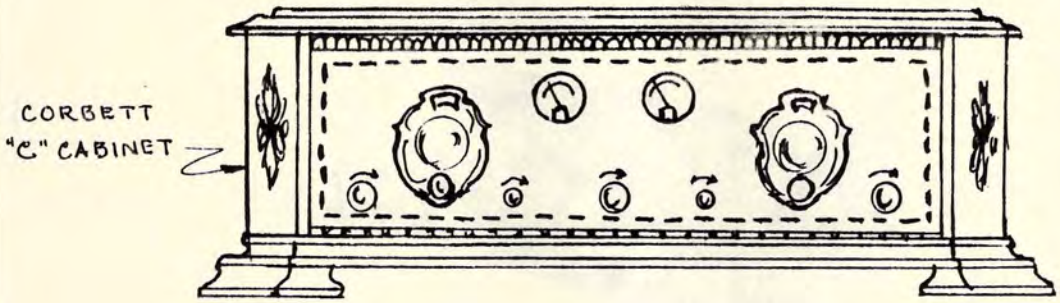

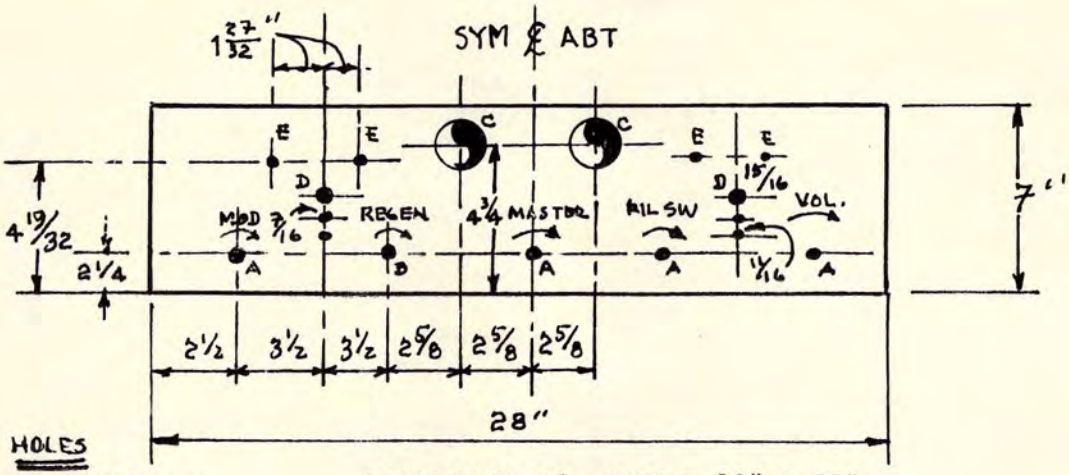

HOLES

A = 7/16" ø
B = 3/8" ø
C = 2 1/8" ø
D = 5/16" ø
E = 11/64" ø

LIGNOLE Panel. Base = 10" x 27"
(2) K-W Walnut Dials #592.
Jewell #135 & #135B Meters.
Hammarlund .0005 MFD Variables.
Hammarlund MC-9 Midget Variable.
Na-Ald Cushioned Sockets. (11)

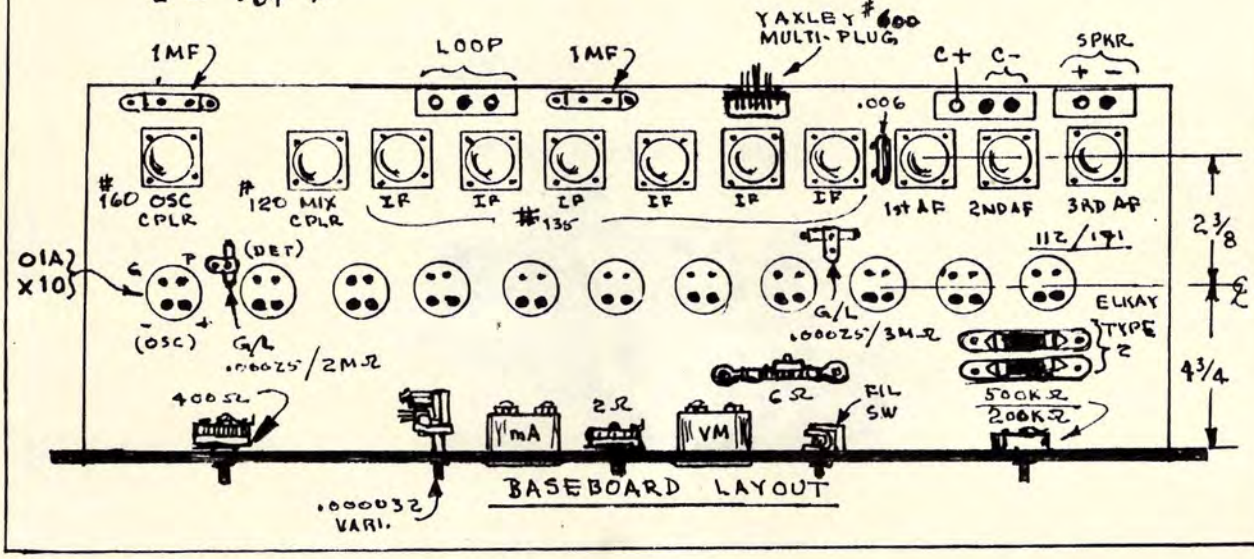

BASEBOARD LAYOUT

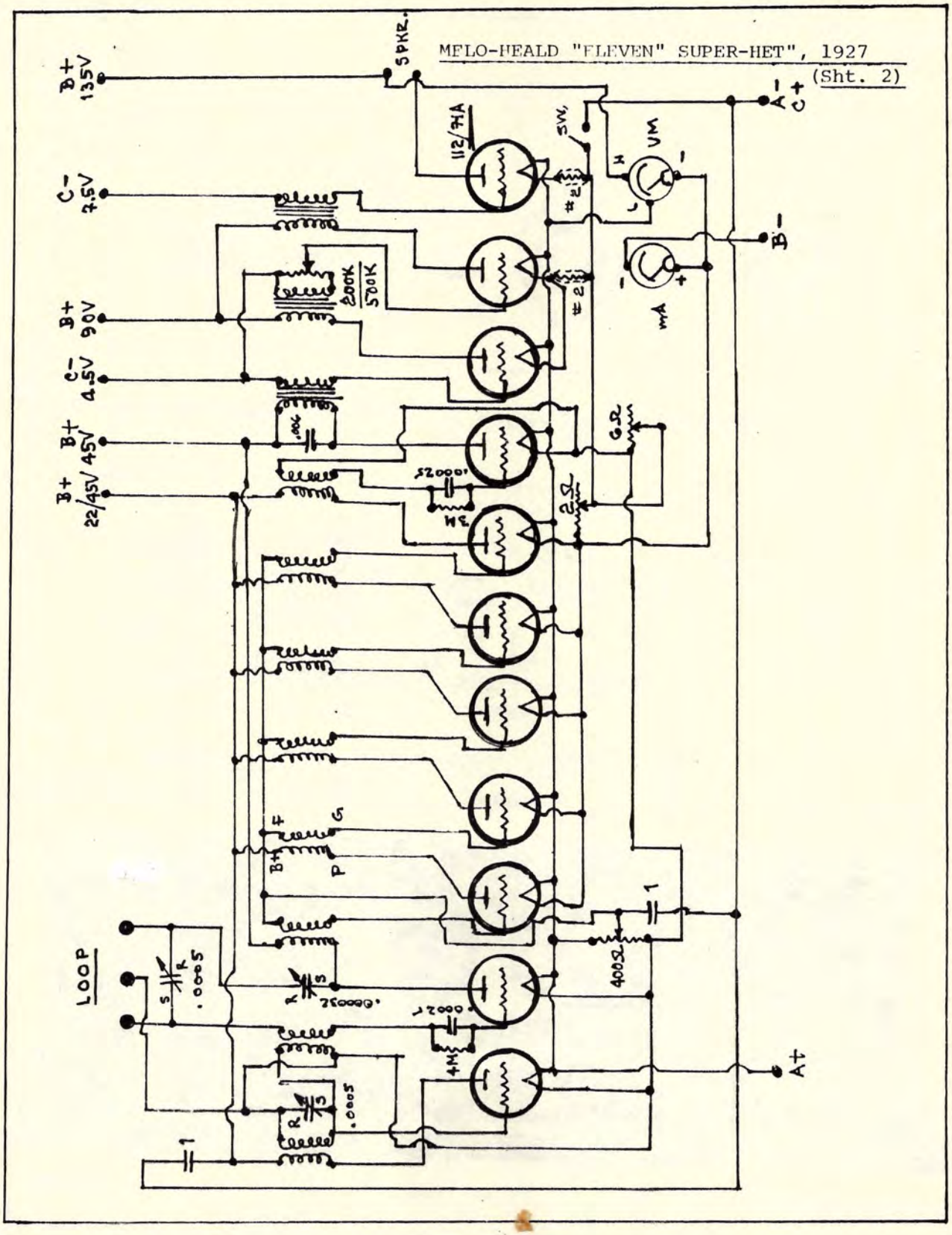
MELO-HEALD "ELEVEN" SUPER-HET", 1927
(Sht. 2)
B+ 135V
C- 7.5V
B+ 90V
C- 4.5V
B+ 45V
B+ 22/45V
5PKR.
112/71A
SW.
VM
mA
A-
C+
B-
A+
200K
500K
.006
.00025
3M
2Ω
G.Ω
400Ω
1
4M
.0005
LOOP

MELO-HEALD "HOT-SPOT FOURTEEN" SUPER; Sht.1

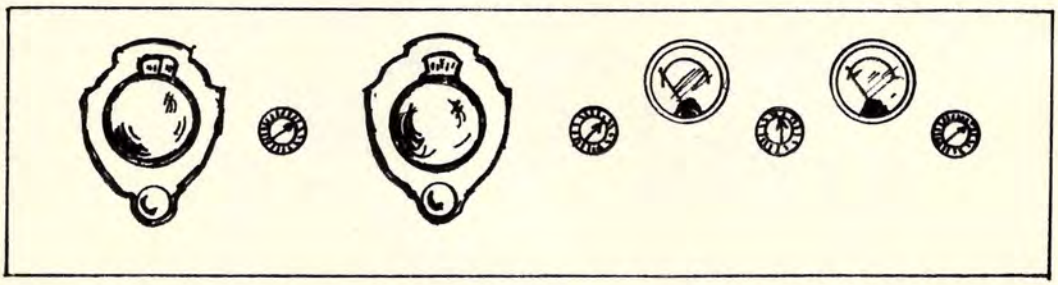

Panel = 7"x30". Sub-Panel = 7"x29". Baseboard = 10"x29"x½".

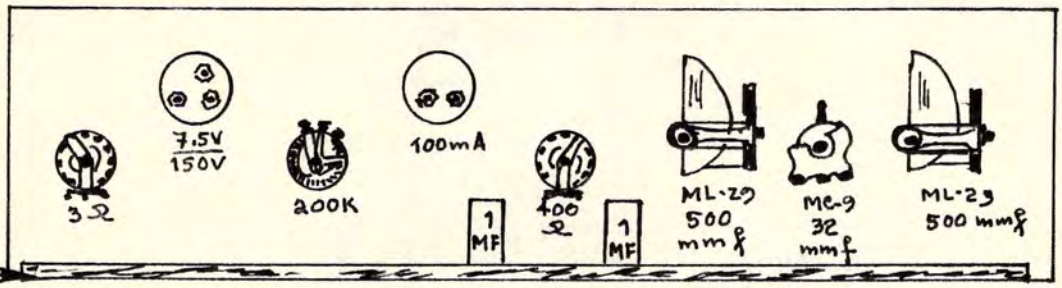

Baseboard

REAR VIEW- SUB-PANEL ASSY. REMOVED

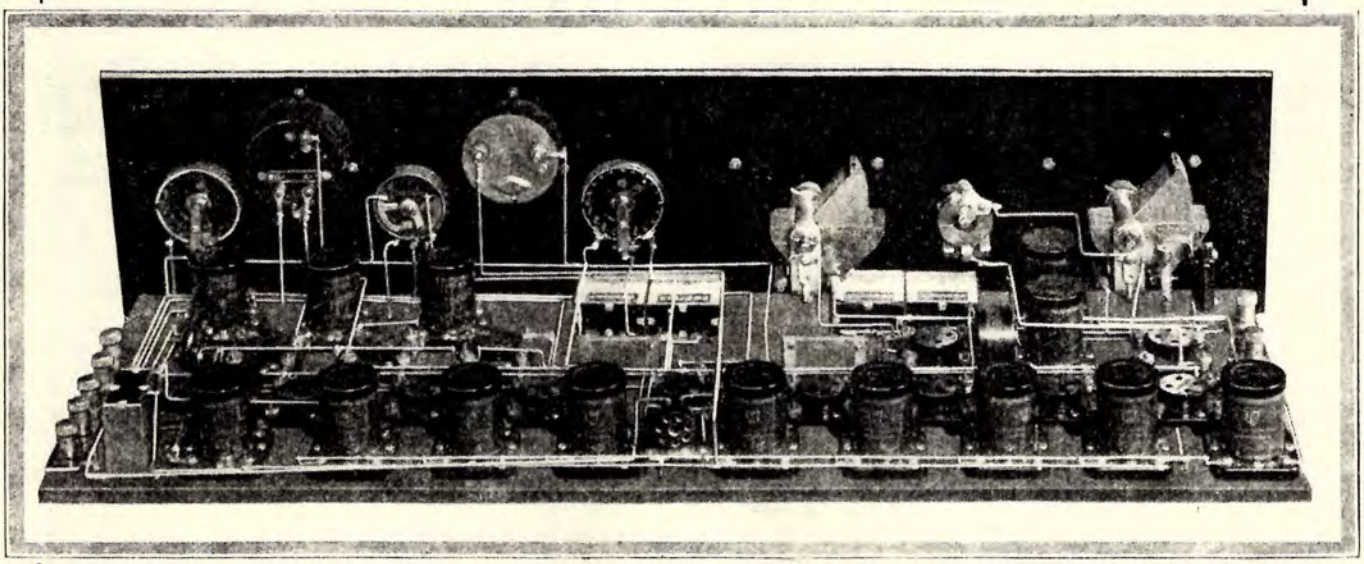

MELO-HEALD "HOT-SPOT FOURTEEN" SUPER; Sht. 2

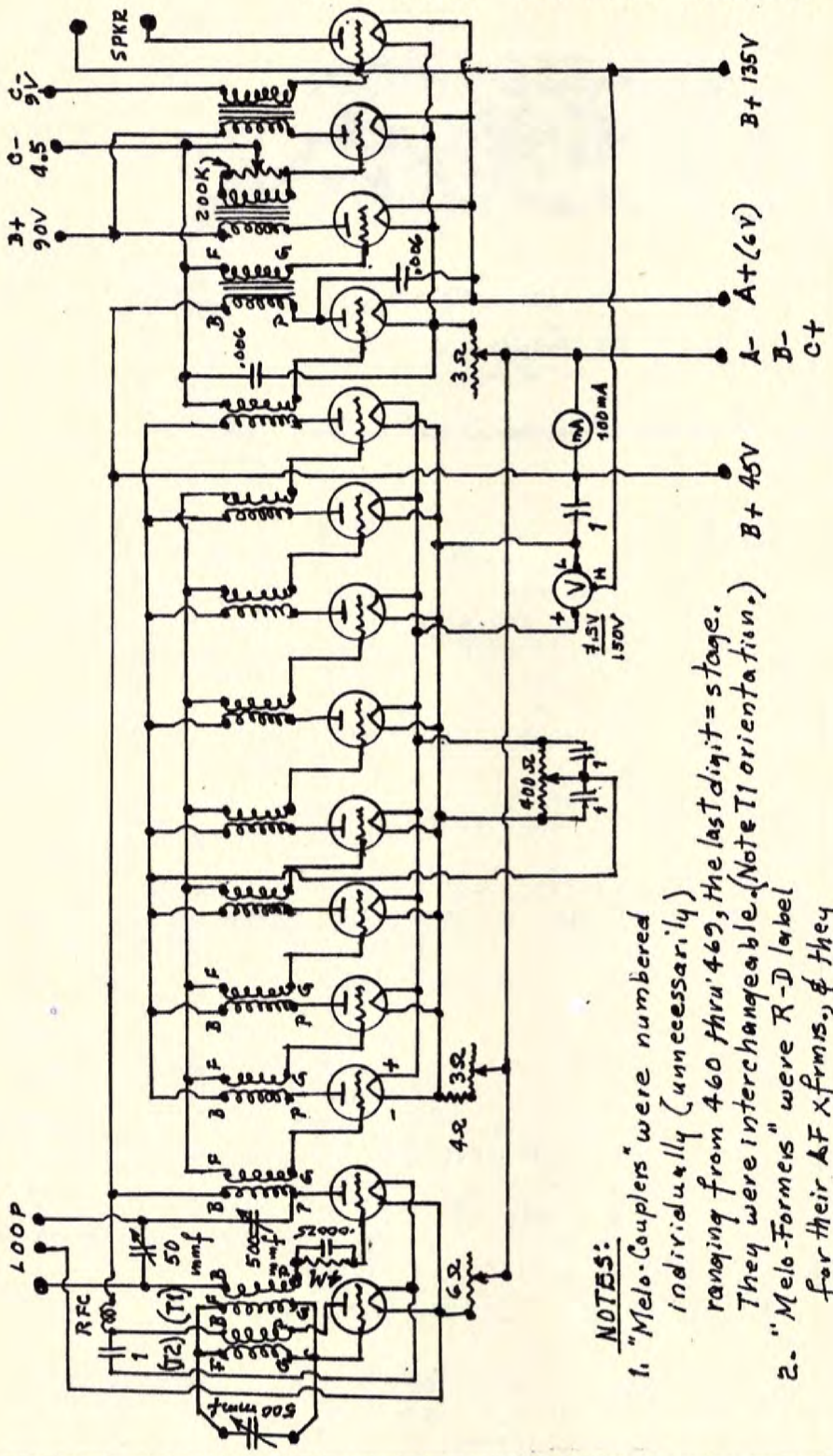

NOTES:

1. "Melo-Couplers" were numbered individually (unnecessarily) ranging from 460 thru' 469, the last digit = stage. They were interchangeable. (Note T1 orientation.)
2. "Melo-Formers" were R-D label for their AF xfrmrs., & they were all the same.
3. (8) X99 Tubes required; (5) 01A Tubes; (1) 12 or 71 Tube.
4. FIL current = 2.25 A @ 6V; "B" current consumption = 35 mA.

In any gathering of vintage radio buffs one will always hear talk of all the sacred cows of the early days, such as RCA, Crosley, A-K, Stromberg-Carlson, Philco, etc. Now and then one may also hear talk of Marconi, Telefunken, Phillips, or Crowder. However, one rarely if ever hears of a unique Canadian contribution to the rise of Radio - the Kipp "Mercury Super Ten", designed by Chas. A. Lowry in 1921; and was exceedingly popular across Canada from 1924 through 1927.

Most hobbyists are aware of the numerous sub-contractors in Canada who worked for the Octupus and its attendent pool associates, such as Western-Electric, Northern-Electric, G.E., Graybar, as well as the foreign firms of Marconi and Phillips, but few seem to know that Lowry's contribution was as distinctive and as significant as any occurring in the U.S. While one rarely encounters the "Mercury Super Ten" in local collexions, quite a few may be seen in Canadian collexions, happily.

Because of the paucity of real knowledge anent Lowry's contribution to the game, I have decided to epitomise the story here, as I feel that the story is important, and also because you are not likely to find it anywhere else. My thanks are openly given to Samuel L. Sargent of Laconia, New Hampshire, for the impetus and material from which the following commentary is drawn. He remembered having read an article on the "Mercury Super Ten" in a 1968 copy of "The Cat's Whisker", a hobby periodical of the time, and I commend his memory, and his interest in sharing his enthusiasm - the basis of any hobby.

* * *

As has been frequently mentioned throughout these SKETCH-BOOKS, the rise of Radio was due in very large measure to the labours and love of individuals, not corporations. The advent of the "Mercury"

was completely the result of the work of Lowry in 1921. Lacking the facilities and the means to properly market the receiver, he joined H.M. Kipp of Toronto. Kipp was primarily a dealer of motor-cycles, having the largest national distributorship in Canada. His dealers were quite willing to carry radios as a side-line, especially after the son, Herbert, had secured a license from Atwater Kent to handle their TRFs.

It developed that the "Mercury" was at that time the only set capable of direct and reliable short-wave reception from overseas. As mentioned elsewhere herein, Main Johnson of the Toronto "Daily Star" newspaper conceived of the idea of using the "Mercury" to pull in the signals from G5SW (London), and rebroadcasting them over their station SCFCA. The chime of "Big Ben" was rebroadcast every day at 7 p.m. for a solid year, without fail. (In passing, it might be mentioned that contrary to many here, "Big Ben" is not a clock; it is the name given to the largest bell in the clock tower at Westminster.)

Needless to say, the superiority of the "Mercury" became instant news in early radio media, and the Octupus immediately brought suit for "patent infringement" - which had by then become standard of practice for RCA. a sort of hall-mark of the success of firms not a member of the Octupus. It was Lowry, himself, who had legal training, who defended the case against Kipp, and he proved that four of the so-called patent infringements had been obtained by fraud. RCA immediately dropt their suit, and then offered Kipp "free perpetual license under RCA patents", on the understanding that Kipp or Lowry would never publish the circuitry of the "Mercury"! Kipp agreed, and in consequence, no circuit of the "Mercury" was ever published.

When Lowry left Kipp in 1927 to join DeForest, because of Kipp's resistance to the use of the new AC tubes, more than 7,000 sets of the "Mercury", including a 32 VDC version, had been scattered across Canada's outback. Lowry later on went into high offices for various governmental offices within the Empire, and later as consultant to Philco. In 1968, at the age of 73, Lowry fell and broke his hip, and with complications. Radio had gained much from his having been involved in it.

* * *

THE MERCURY SUPER-TEN DESIGN CONCEPT & DETAILS

The original design called for plastic-enclosed variables; later models used split-stator variables. The enclosing of variables in plastic (the early "eisenglas") was favoured by several manufacturers in the U.S., including Acme, Rauland, Flewelling; but such coverings, while a practical concept, proved unfeasible as the eisenglas had a habit of yellowing with age, and was prone to cracking and crazing. Modern plastics would undoubtedly be superior, but use of such would cut too

deeply into the profits of our manufacturers. Use of the variable with a split-stator allowed easier band-spreading, and was also a "first".

The set used the N215A ("Peanut") tubes, with oxide filaments, arranged in two parallel strings of five tubes in series. The IF assembly was a catacomb, shielded and chrome-wax potted, peaked at around 150 KC. Adjustment was made via the hold-down nuts on top of the catacomb cover, thereby contolling the degree of feed-back and controlling regneration over a wide range. The adjusting nuts were set at the factory for maximum IF gain, and then the unit was sealed.

All wiring was by buss-bar connexions to studs on the IF can, and were precursors, in a sense, to what we now call P.C. boards. The RF coils used were actually transmitting coils designed by Morecroft in 1916, and no coil has ever equalled those coils in high-Q and optimal L/C ratio. The RF coils were of the 5-pin type, the fifth pin being used in an internal bridge, by which coils for a given bandspread or frequency range (tuning ratio) could be suitably connected to either or both of the variables without the need for switching.

Coil pins were copper cotter-pins, and the sockets were of a special formulation, turned on a B&S (Browne & Sharpe) lathe. These sockets greatly influenced later sockets produced by such as Alden, Eby, Frost, Jones, Cinch, Amphenol, etc.

The AF sexion included two special Thordarson transformers, designed by Lowry and Thordarson engineers in Chicago to go with the "Peanut" tubes. Thordarson, himself, came out of retirement to work on the transformers, because of his enthusiasm for the "Mercury" circuitry. The P-P output transformer had a winding designed to match an armature-iron type of sound driver for an expotential horn speaker.

The grid bias arrangement was described as "complex". Because the IF filamentaries were in series, there was a different DC bias from the "A"-supply going to each tube in the string. This was designed to be negative-going on each grid, and the IF system was charged at the anodes with not more than 45V. In consequence, no positive grid swings, the highest bias being at the DET end of the tube string. The bias circuit was incorporated into the potted catacomb housing the IF coils.

Bias in the AF sexion also came from the "A"-supply for anode voltages up to 90V. In line-up, the tube at the left of the front row was the RF/Converter tube; at the right of the front row was the OSC tube; and the middle three tubes were the audio driver and the P-P tubes. The Jones power connector at the rear of the chassis carried the A and B voltages, and on a later model, wiring for "C"-supply.

An interesting aspect of the "Mercury" was that its great sensitivity could not actually be measured! This was due to the fact that

so-called signal generators of the day (1927) were, as Lowry phrased it, "The generators in those days were almost unbelievably bad!" The sensitivity of a 20 MC was so great that it far exceeded the leakage threshold of the signal generator.

In summary, the "Mercury Super Ten" was a distinct advance over the conventional super-het that used 01As. As most tubes functioned as voltage amplifiers, Lowry's choice of the Northern Electric "Peanut" tube was far-sighted. To get the required audio output, an extra tube was added in P-P. To balance the series-parallel arrangement, he added, and stabilised, a fourth RF tube, providing increased sensistivity. The drain on the A-battery was less than one-quarter that of 01As, and the B-battery drain was only 20 mA.

The Kipp "Mercury" was offered in kit form, less tubes and cabinet, for $110; a factory built and tested version, complete with all tubes and a walnut or mahogany cabinet, was offered at $200. Remembering that the dollar was on the gold standard in those days, such prices were rather respectable.

* * *

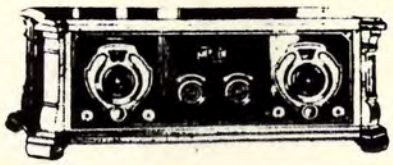

* *
*

THE H. M. KIPP CO., LTD.

Vice-President

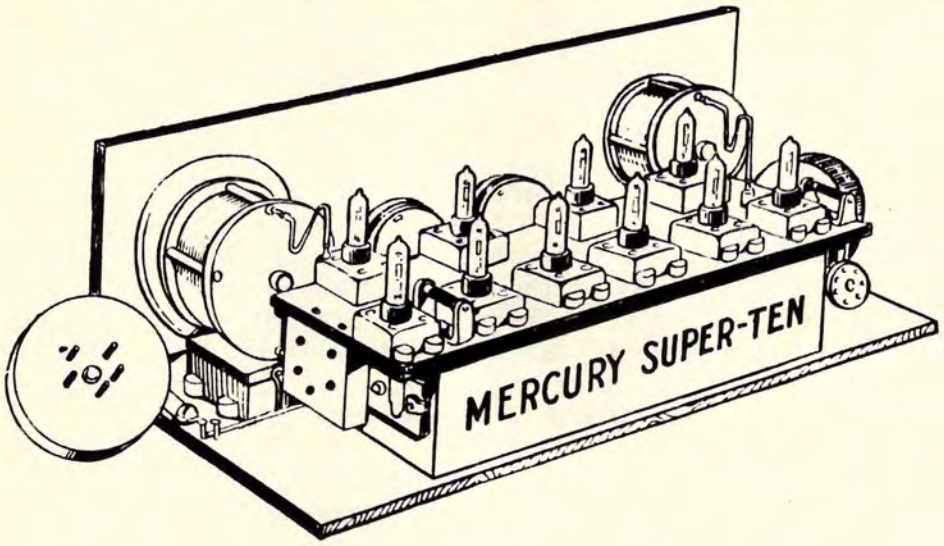

"SUPER TEN"

1. (5) S.G. 24s;(3) 27s;(2) 45s.
2. Tubes in Series-Parallel.
3. Max. "B" drain = 12 mA.
4. 5 stages of IF amplification.
5. Single P-P AF stage.
6. 12-15 KC. signal seperation.
7. Chassis = 18" x 6½" x 8½".
8. Also known as "STANDARD SW. TEN".

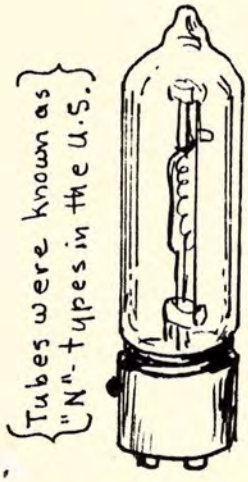

"PEANUT" TUBE
(Full-Scale)
R-215-A

FIL mA. .25 A
FIL V. .85/1.10V
DET TP 22-45V
AMP TP 90-135V
GRID V. -9
AMP. Constant 9
OUT. IMP. 15KΩ

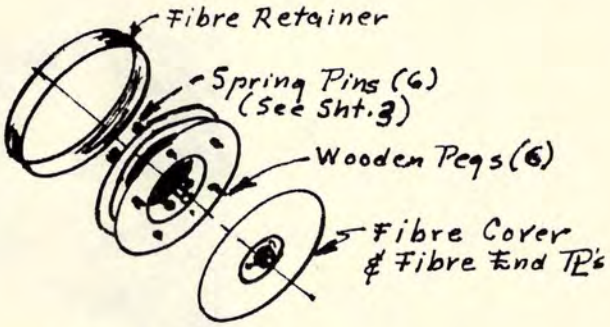

PLUG-IN RF COILS
(Moorecroft Style.)
Exploded View.

The "SUPER TEN" was also offered in a "DeLuxe Jewel-Box" cabinet; see over-leaf for a detail.

The Mercury

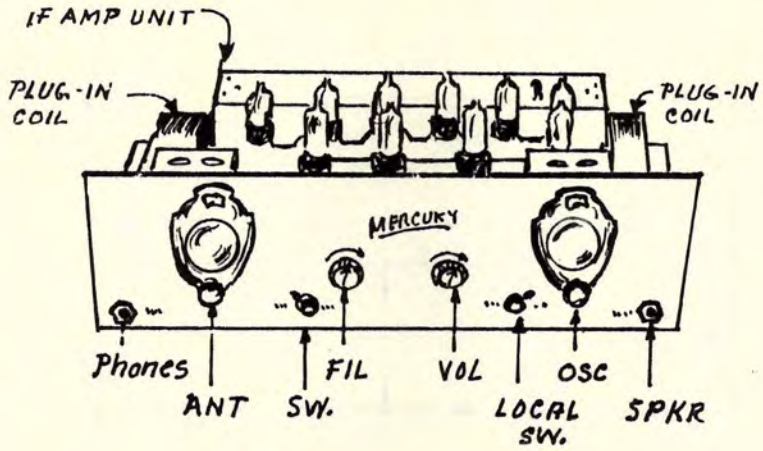

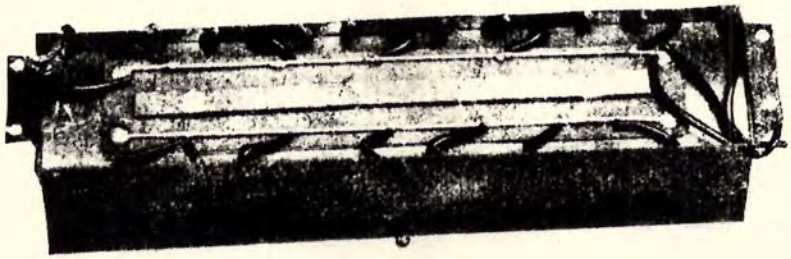

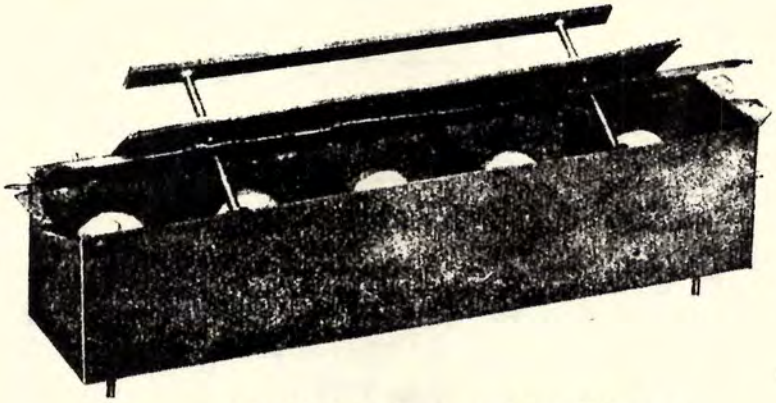

Radio Frequency Amplifiers

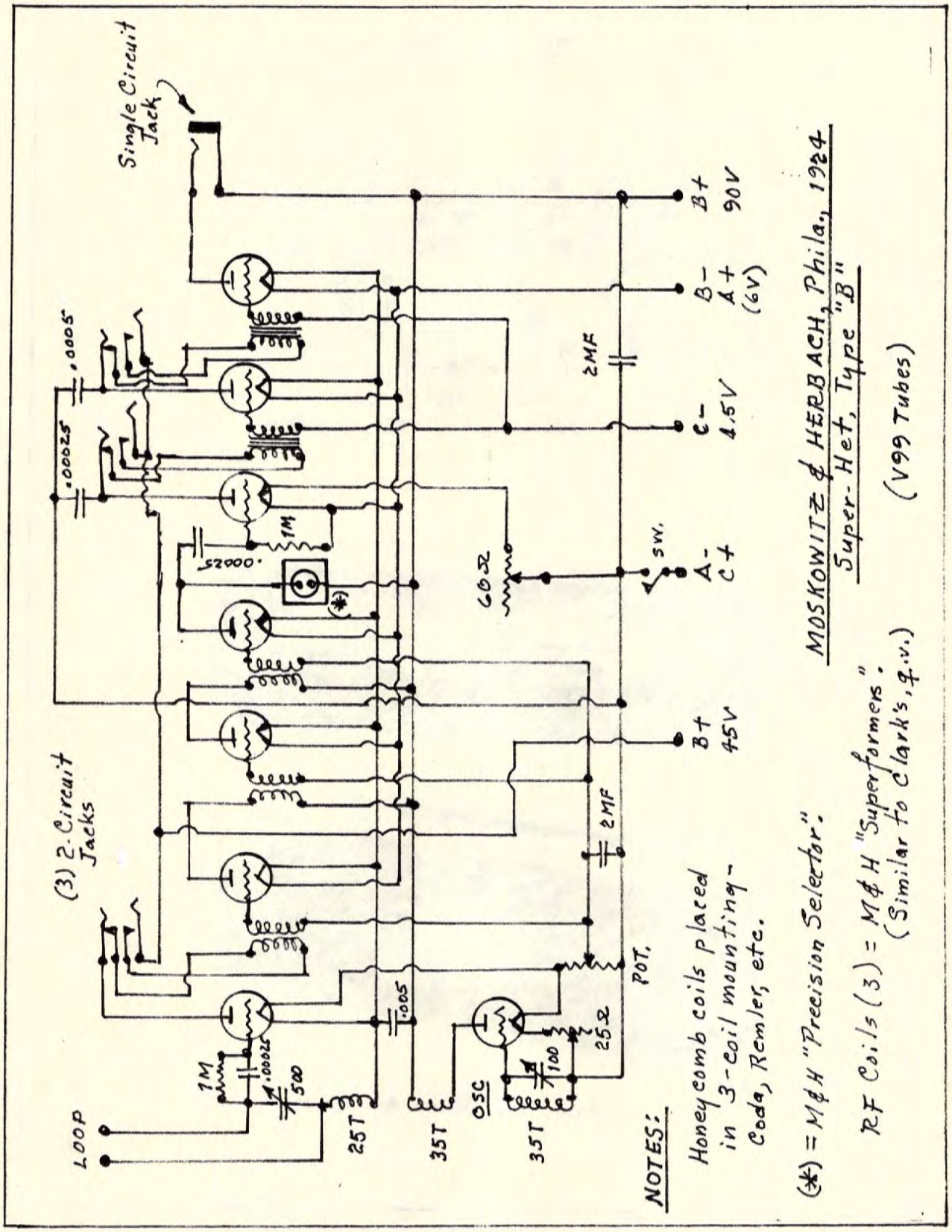
Single Circuit Jack
.0005
.00025
.00025
1M
1M
(*)
60Ω
SW.
2MF
2MF
B+ 90V
B- A+ (6V)
C- 4.5V
A- C+
B+ 45V
(3) 2-Circuit Jacks
LOOP
.00025
500
25T
.005
35T
OSC
35T
100
25Ω
POT.
NOTES:
Honeycomb coils placed in 3-coil mounting - Coda, Remler, etc.
(*) = M&H "Precision Selector".
RF Coils (3) = M&H "Superformers". (Similar to Clark's, q.v.)
MOSKOWITZ & HERBACH, Phila., 1924
Super-Het, Type "B"
(V99 Tubes)

THE **Madison-Moore** SUPER-HETERODYNES; Sht. 1

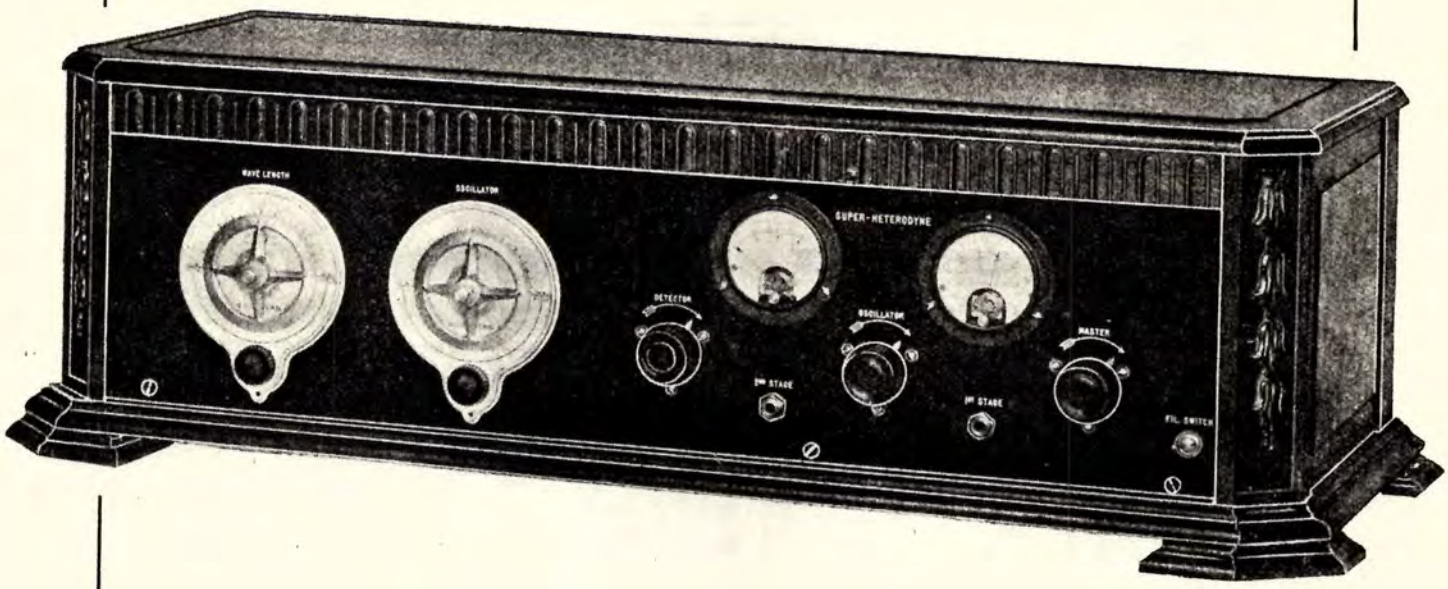

The Madison-Moore Rado Company of Denver enjoyed a brief but intense popularity, commencing in 1926 and lasting through 1928. They went from eight to fourteen tubes during that period, and averaged two new designs per season. The first receivers were battery-operated, but they were quick to climb on the AC or "electrified" band-wagon. They were also the first to offer the home-constructor nickel-plated cases housing RF transformers.

In the following pages you will find several different Madison-Moore circuits, all of which are worth trying, if you have the Madison-Moore coils, which, like all other sets of that kind, were the "heart" of the circuit. The sets were notable for their ability to pull in short-wave broadcasts without complicated coil changes. This was accomplished by removing the wire connecting the two variables, resulting in a capacity of 250 mmf instead of the normal 500 mmf.

And like other manufacturers of a particular item, the coils in this instance, all other parts were from other manufacturers, such as General Radio, Sangamo, Daven, Samson, Cutler-Hammer, etc. - all good stuff.

MADISON-MOORE SUPER-HETERODYNE; 1926
200 to 600 Meters Sht. 1

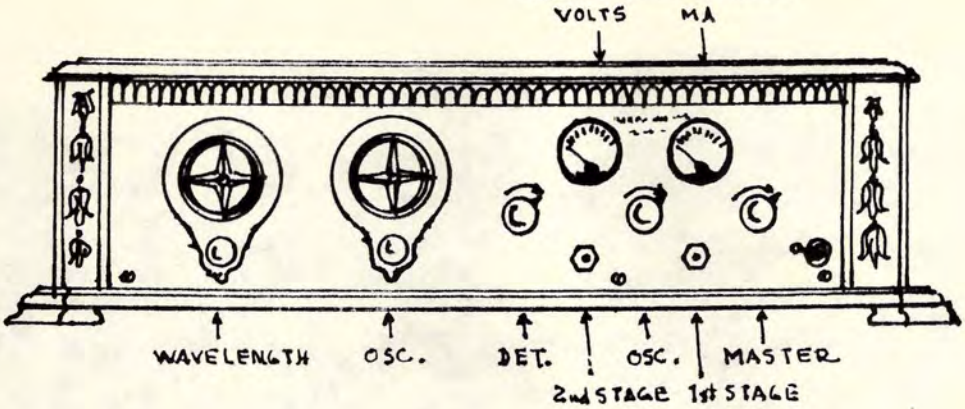

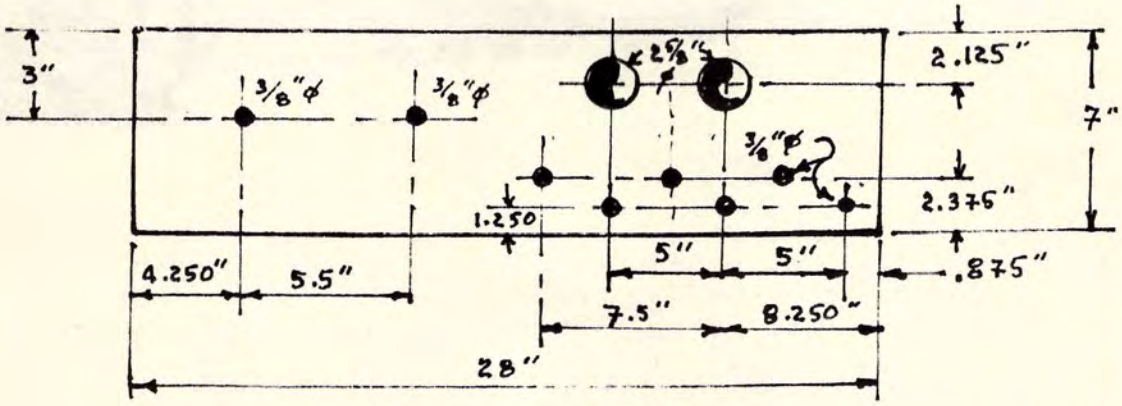

PANEL LAYOUT

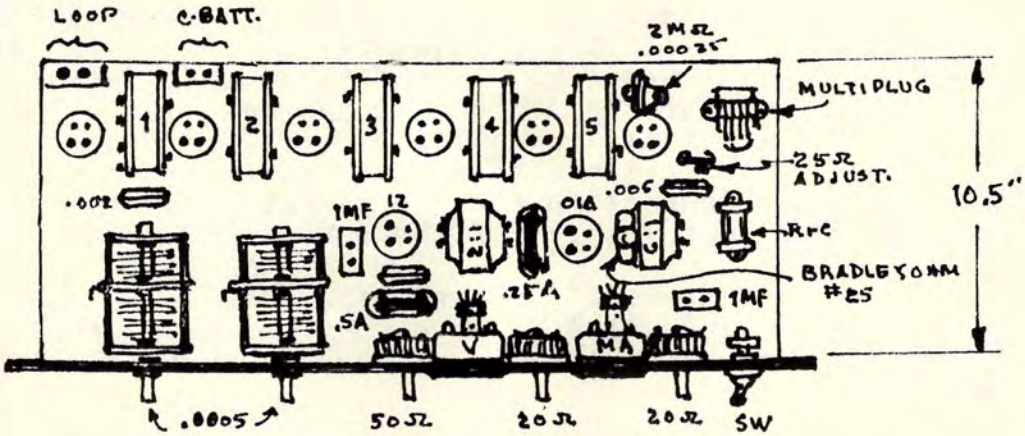

PLAN VIEW

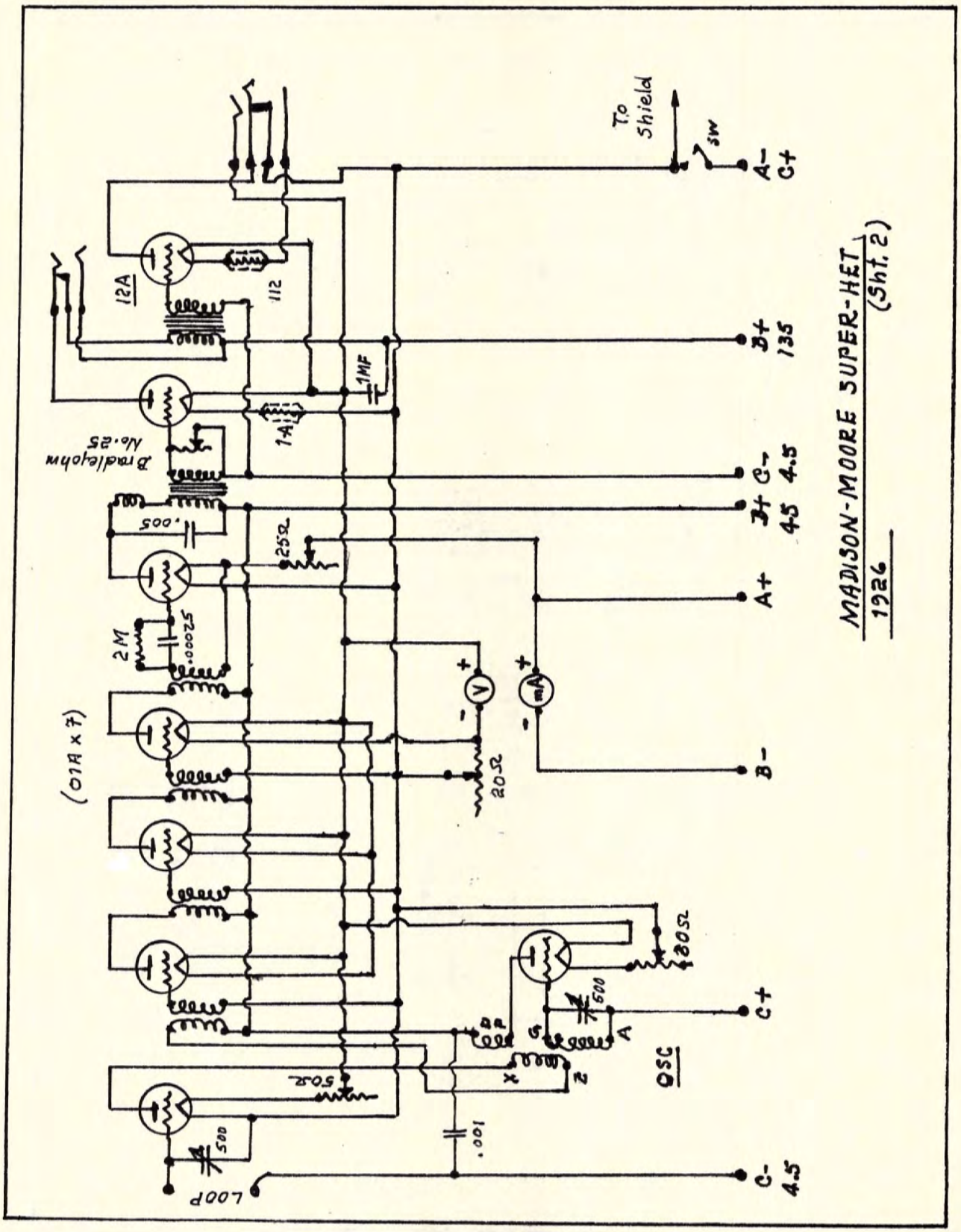
MADISON-MOORE SUPER-HET
1926
(Sht. 2)
To Shield
SW
A-
C+
B+
135
C-
4.5
B+
45
A+
B-
C+
C-
4.5
12A
112
1MF
1A
Bradleyohm No. 25
.005
25Ω
2M
.00025
(01A x 7)
500
LOOP
.001
20Ω
30Ω
500
OSC

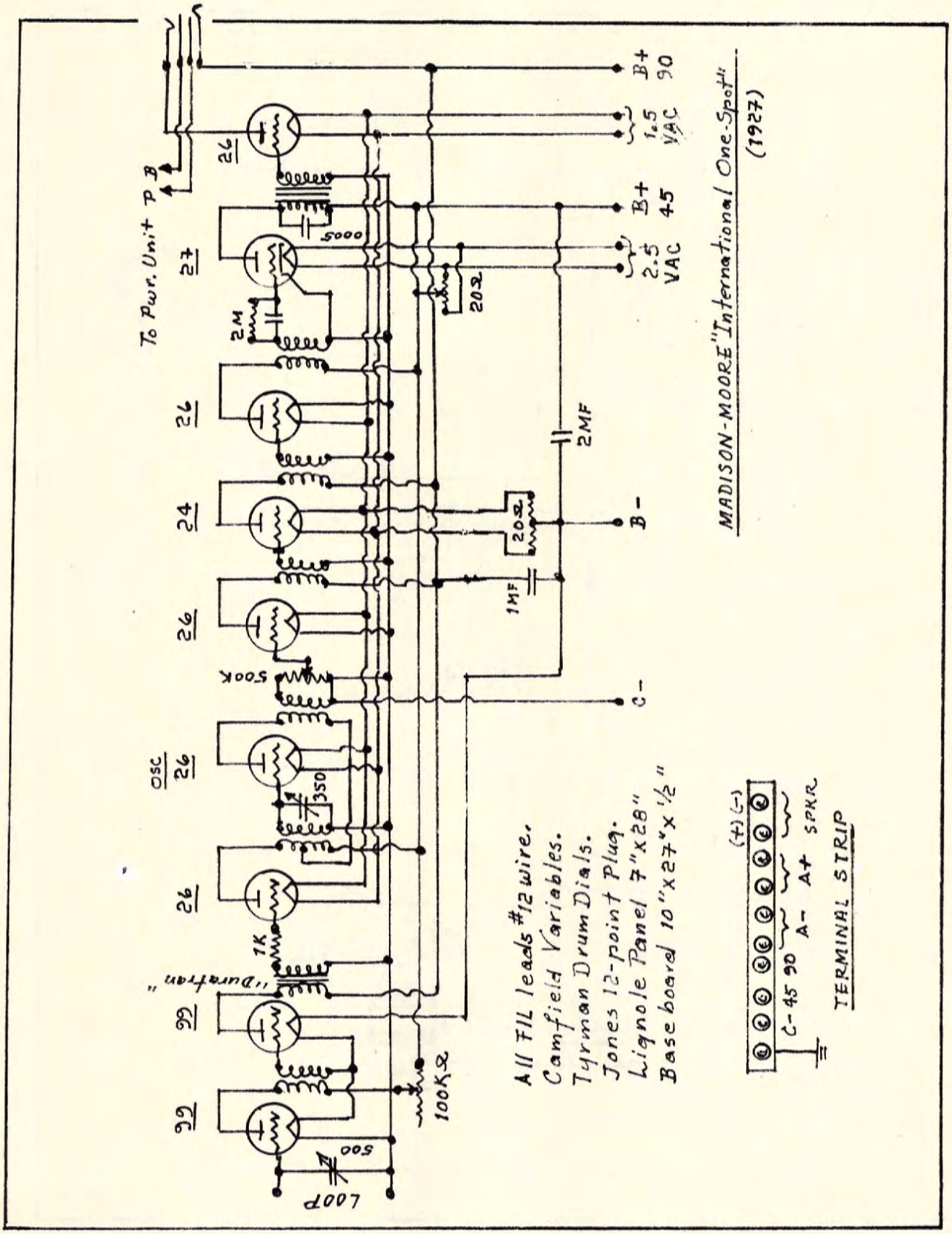
To Pwr. Unit P B
26
27
26
24
26
OSC 26
26
"Duraftan"
99
99
1K
2M
5000
20Ω
500K
350
2MF
20Ω
1MF
100KΩ
500
100P
B+ 90
1.5 VAC
B+ 45
2.5 VAC
B-
C-
All FIL leads #12 wire.
Camfield Variables.
Tyrman Drum Dials.
Jones 12-point Plug.
Lignole Panel 7"x28"
Base board 10"x27"x 1/2"
(+) (-)
C- 45 90
A- A+ SPKR
TERMINAL STRIP
MADISON-MOORE "International One-Spot"
(1927)

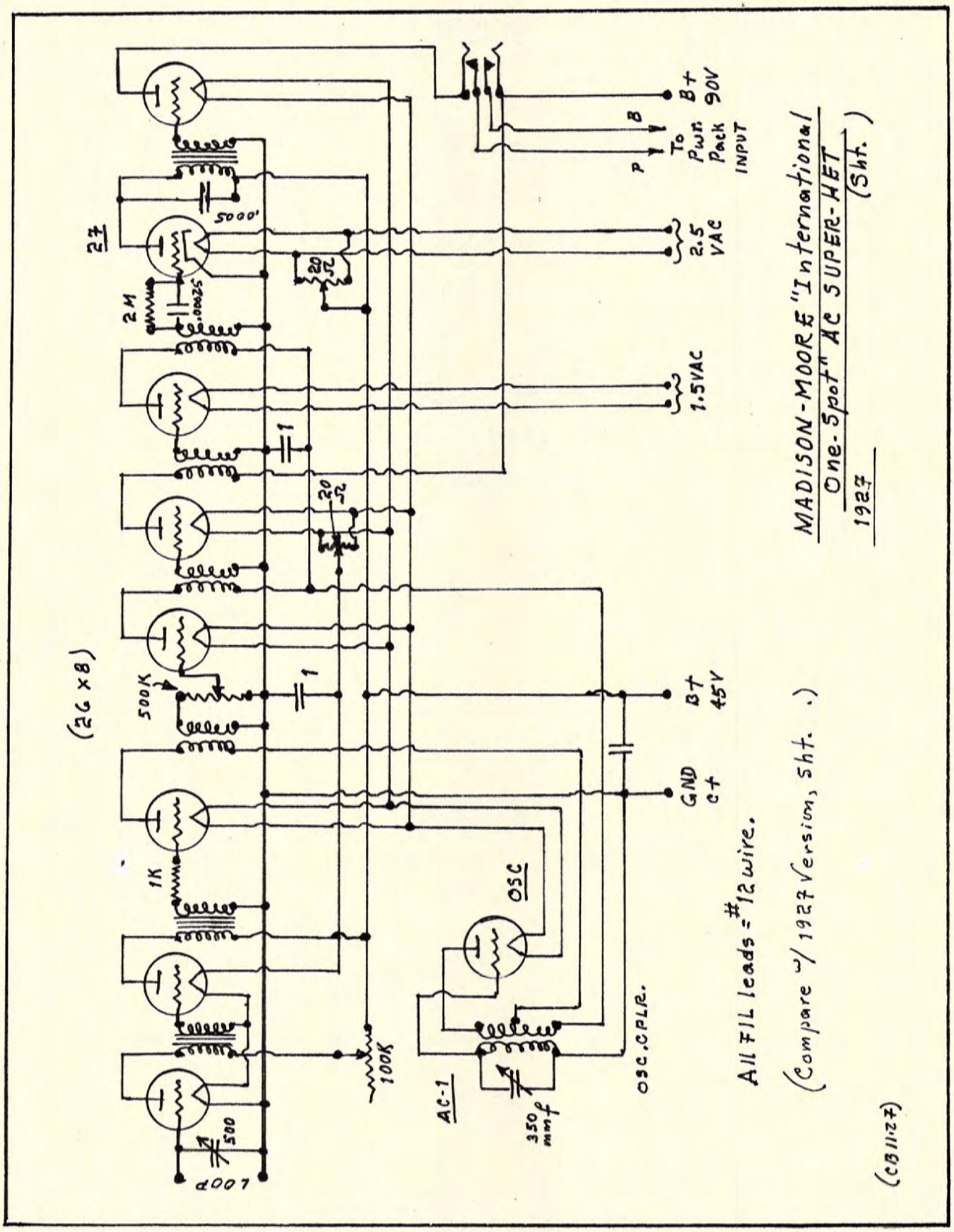
MADISON-MOORE "International"
One-Spot" AC SUPER-HET
1927
(Sht.)
(Compare w/ 1927 Version, sht. .)
All FIL leads = #12 wire.
(CB 11-27)
(26 x 8)
27
2M
.00025
5000'
20 Ω
1
500K
1K
100K
500
.0007
AC-1
350 mmf
OSC
OSC. CPLR.
GND
CT
B+
45V
1.5VAC
2.5
VAC
B+
90V
B
P
To
Pwr
Pack
INPUT

MADISON-MOORE SUPER HETERODYNE, 1926
(Sht. 4)

GENERAL NOTES:

To tune lower than 200 meters, remove the connecting wire from the two variable condensers. This results in a capacity of 250 mmfd.

1. AF transformers = General Radio #285.
2. Variable condensers = .0005 mfd.
3. Voltmeter = Weston 0-8V, Type #301.
4. Ammeter = Weston 0-50 mA, Type 301.
5. RFC = Samson #51 (85 mH).
6. (2) Pacent "Microvern" dials.
7. Bradleyohm #25.

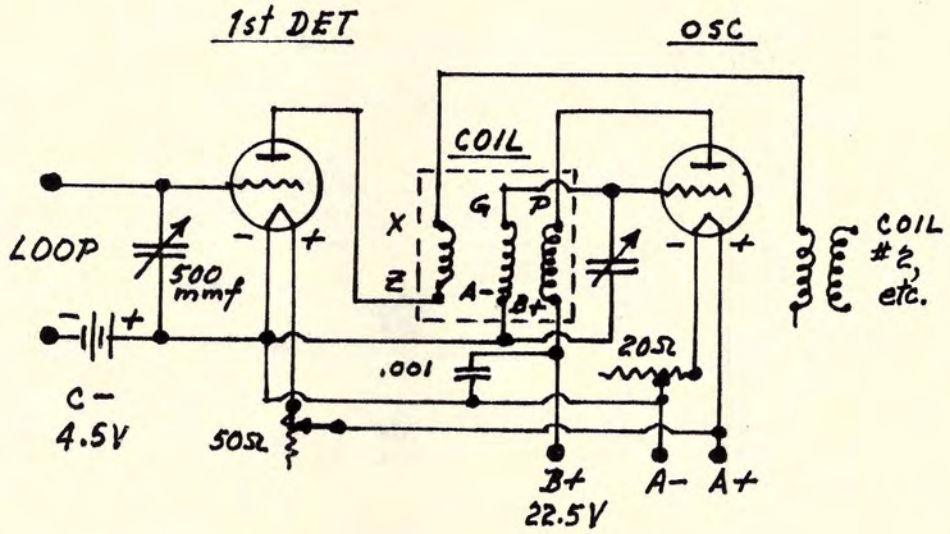

OSCILLATOR CIRCUITRY SIMPLIFIED

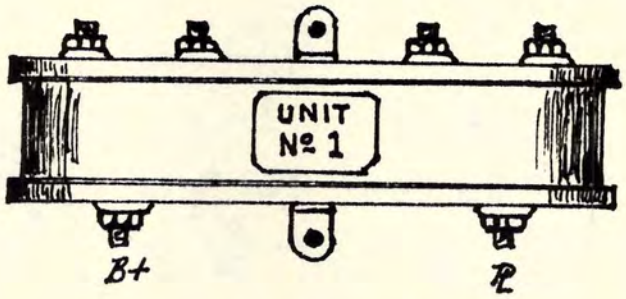

PLAN VIEW

NOTES FOR SHEET 1

1. All panel holes 13/32", unless noted.
2. Loop and Speaker Strip = 2½" x .75" x .186".
3. C-Battery Strip = 2¼" x .75" x .186.
4. M-M name was in gold Gothic script.

(CB Spr.-26)

MODIFIED MADISON-MOORE "ONE-SPOT" SUPER-HET, 1927: Sht. 1

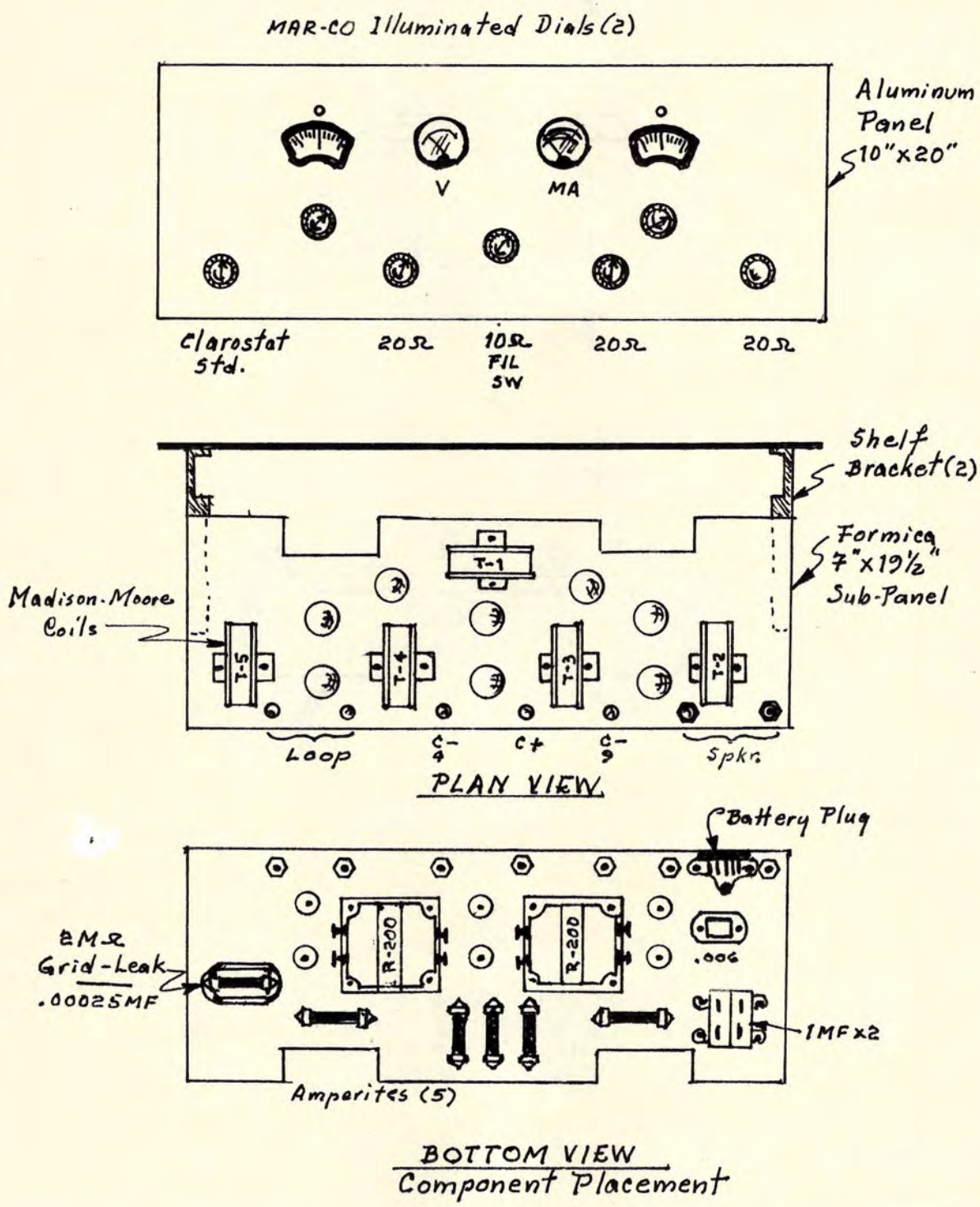

MODIFIED MADISON-MOORE "ONE-SPOT" SUPER-HET, 1927; Sht. 2

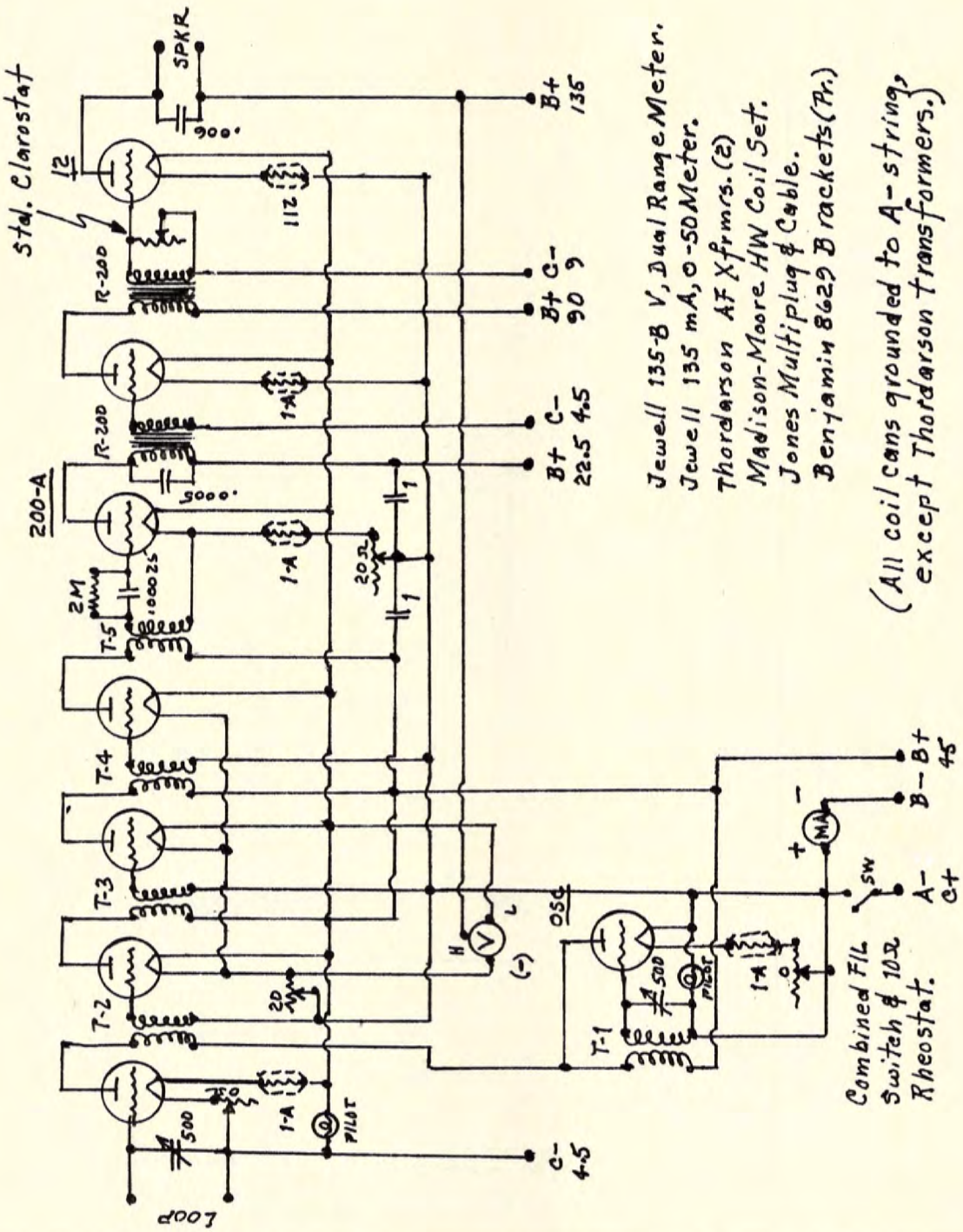

MADISON-MOORE "International One-Spot" POWER AMPLIFIER, 1927

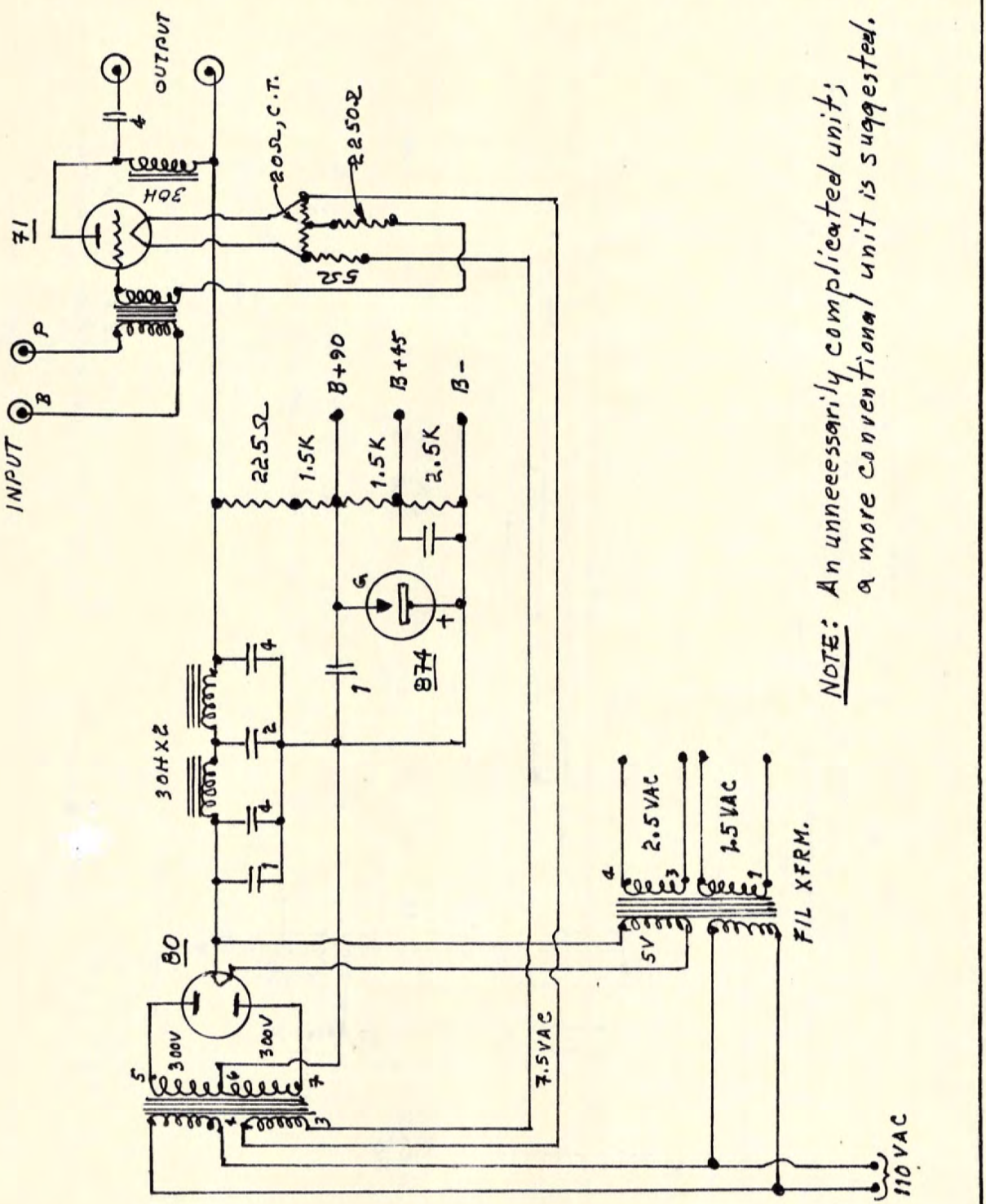

NOTE: An unnecessarily complicated unit; a more conventional unit is suggested.

NAKKEN "ULTRA 5" REGENERATIVE SUPER-HET, 1927;Sht.1

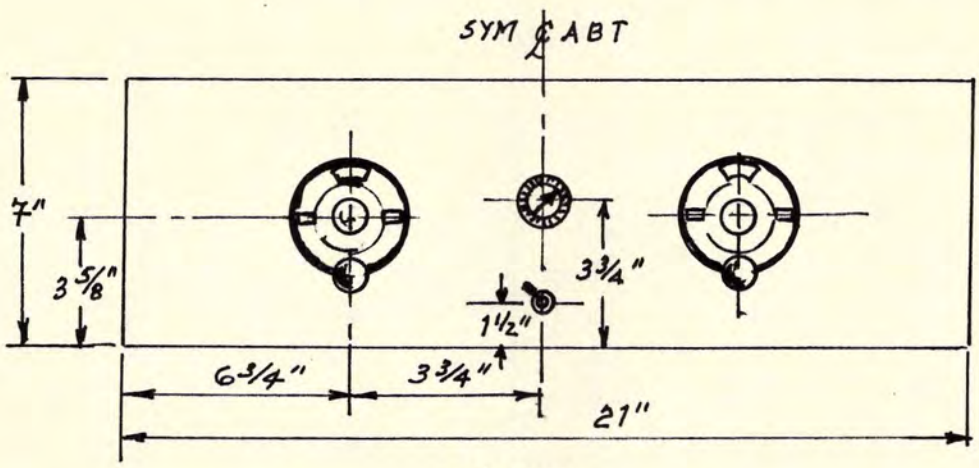

PANEL

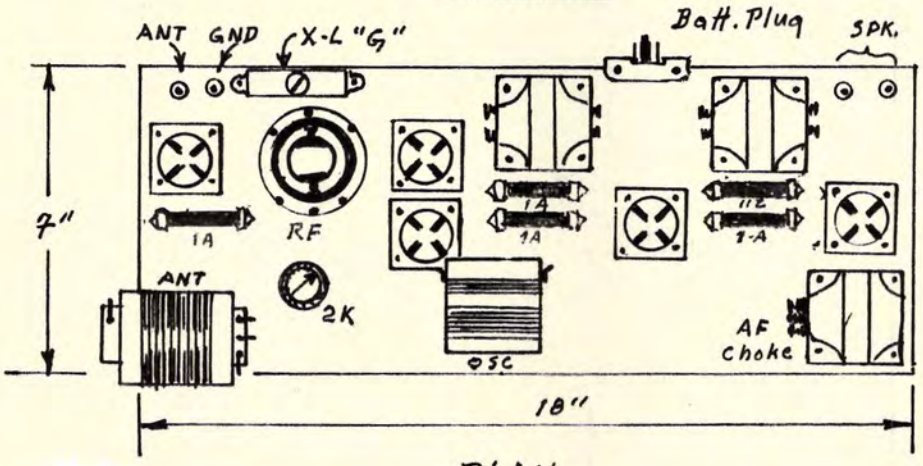

PLAN

RF Coil = S-M 111-A.
ANT & OSC Coils May Be By Benjamin, Hammarlund, etc.
THORDARSON AF XFRMRS. & CHOKE.
YAXLEY Battery Cable & Plug.
HAMMARLUND Variables, 250 mmf, 350 mmf.

NAKKEN "ULTRA 5" REGENERATIVE SUPER HET, 1927; Sht. 2

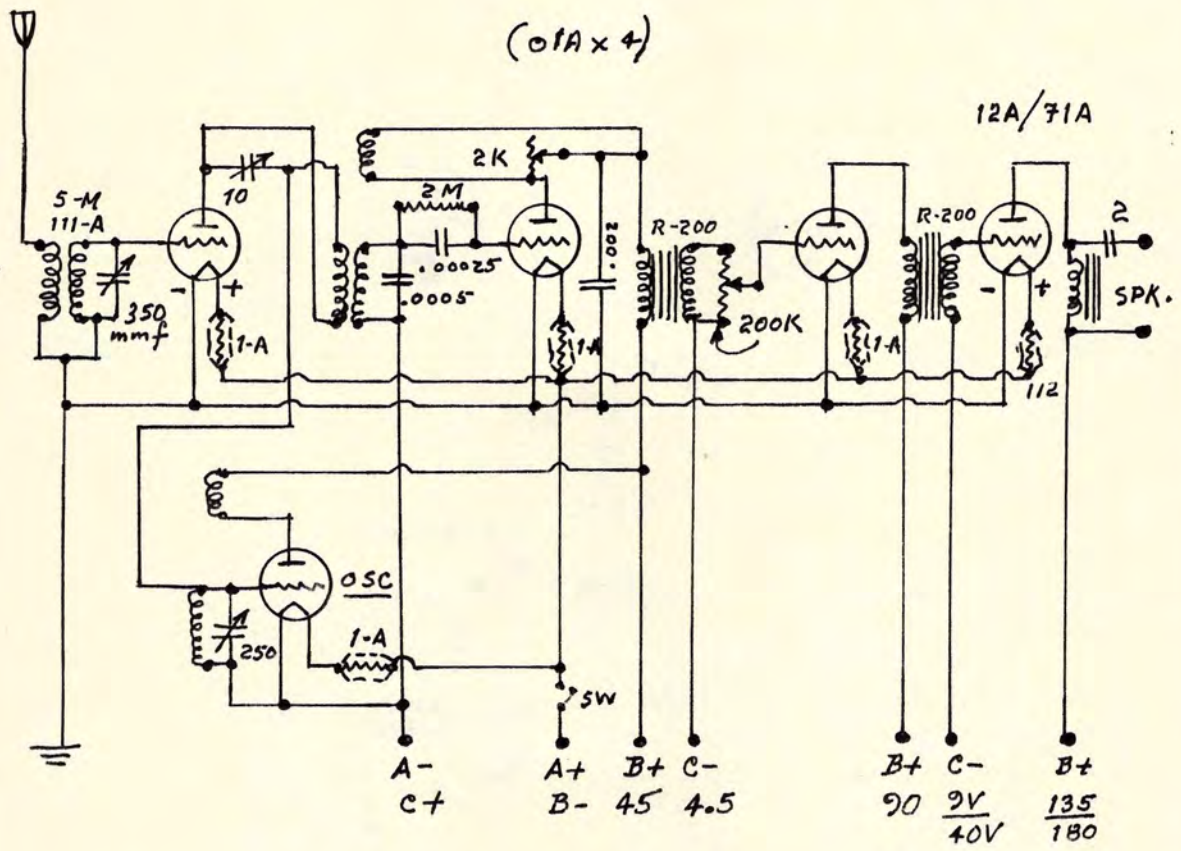

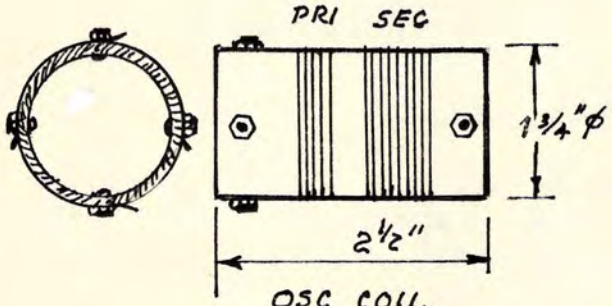

OSC COIL
PRI = 15T, #26 DSC.
SEC = 42T, #26 DSC.

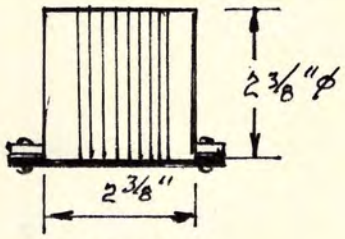

ANT COIL
PRI = 16T, #24 DSC.
SEC = 80T, #24 DSC.

(RAH 4·27)

A NOTE ON BAND-PASS FILTERS; Sht. 1

As with other periferal introductions into Radio circuit designs of the Twenties, the band-pass filter for super-hets was given its brief hour in the sun. These notes merely mention the high points of both the concept and the design; additional details are available, if you are interested, for example, in a frequency not listed.

Such filters were immediately packaged by Silver-Marshall to Rasco, and oddly enough that manufactured in job-lots by RASCO was the better filter. RASCO (Radio Specialty Company, New York) was one of the largest Radio mail-order houses in the country, even larger than Chicago Salvage Stock Company, despite the latter's claim to being the biggest. RASCO was "ram-rodded" by one Louis Gancher, whose integrity was such that it meritted editorial comment in a couple of media.

In all of the band-pass filters offered the home-constructor each stage was individually shielded, after it was realised that the old technique of potting was ineffectual. The values shown over-leaf have been rounded off, and a typical filter for 45KC is shown, as being typical of the basic circuit.

Some of the commercial versions will turn-up at flea-circuses and you might pick-up one, just to play around with it. However, there were a few pertinent points that should be mentioned anent band-pass filters. The sole purpose of a band-pass filter was to increase selectivity, not sensitivity. There was always a slight loss of signal intensity when using such a filter, and as such filters were not perfect, inherent properties caused definite losses.

The effective resistance of the coils (L1) and the condenser (C1) also caused losses. In the main such losses were negligible, but should be mentioned, in the event you're a purist in these matters. When a noticeable reduction of signal strength occurs, it may be minimised by increasing the amplifying power of the IF system, usually by increasing the negative grid bias.

* * *
* *
*

A NOTE ON BAND-PASS FILTERS; Sht. 2

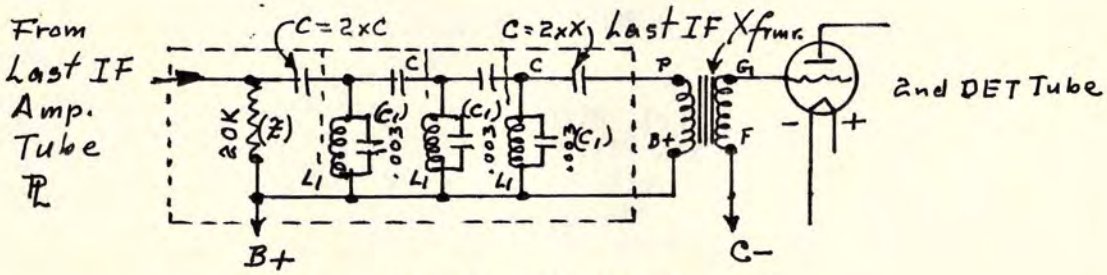

BASIC DIAGRAM
(Band Pass = 10KC)

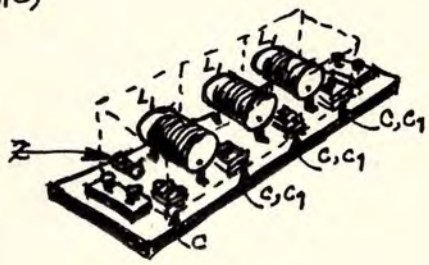

30KC IF

Z (Ohms)	C (mfd)	C1 (mfd)	L1 (mH)
5K	.00109	.0054	4.55
10K	.00054	.0022	9.1
15K	.00036	.0015	13.6
20K	.00027	.0011	18.2

45KC IF

5K	.0007	.0050	1.99
10K	.00035	.0025	3.9
15K	.00023	.0016	5.9
20K	.00017	.0012	7.9

52KC IF

5K	.00062	.0052	1.4
10K	.00031	.0026	2.9
15K	.0002	.0017	4.2
20K	.00015	.0013	5.9

70KC IF

5K	.00045	.0055	.82
10K	.00022	.0027	1.64
15K	.00015	.0018	2.4
20K	.00011	.0013	3.2

100KC IF

Z	C	C1	L1
5K	.0003	.0057	.39
10K	.00015	.0028	.79
15K	.0001	.0019	1.18
20K	.00007	.0014	1.5

112KC IF

5K	.00029	.0005	.315
10K	.00014	.0029	.63
15K	.00009	.0019	.94
20K	.00007	.0014	1.26

115KC IF

5K	.00027	.0058	.301
10K	.00013	.0029	.603
15K	.00009	.00015	.905
20K	.00006	.00014	1.206

Coil Form = 3" x 1½" ϕ (all).

45 KC { C = .00014 mfd, C1 = .003 mfd } L1 = 165T, #30 Enamel, 2" long. (600mH) Z = 20K Lavite (or equal).

JACKSON H. PRESSLEY SUPER-HET, 1926; Sht. 1

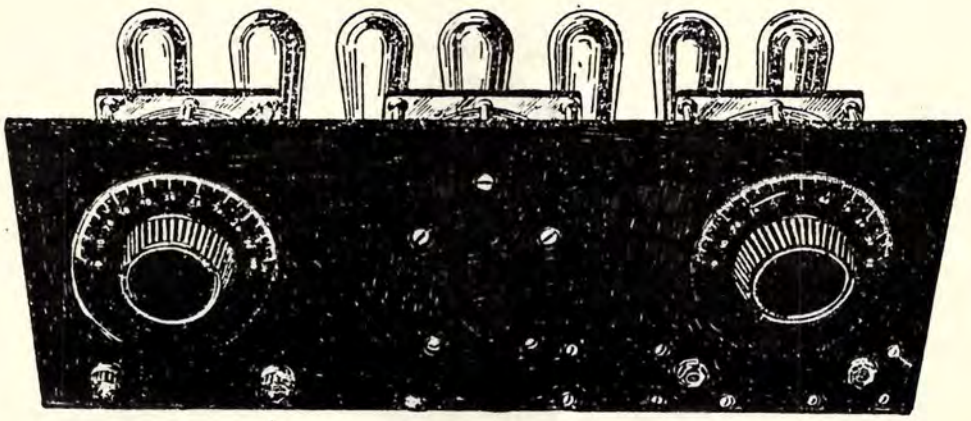

J.H.Pressley was one of the American radio engineers making up the team in Paris during the closing months of the Kaiser's War, along with Armstrong and Lacault, the Britihs and the French, seeking to come up with a practical super-heterodyne receiver. After the War he worked with Armstrong for a awhile on further experiments, chiefly seeking improvements in the super-regenerative circuitry.

He was a medium-size man, middle-aged and bald, with thick, wide lips and a personal vanity out of proportion to his size. In his office there always hung a life-size oil painting of himself, a cut of which you will find in Volume I.

Pressley designed several super-hets of immediate albeit limited popularity in the mid-Twenties. Much printer's ink was spilled in praise of Pressley's circuits, but one easily got the impression that editors were more respectful of the man than his contributions to the state-of-the-art. Or it may have been his association with Armstrong and his title of Chief Engineer of the X Radio Labs at Camp Vail in New Jersey. Anyway, his circuitry merits attention.

Two features of his sets, called "salient" by early writers, were the bridge-balancing circuit (see also the "Quadraformer") which prevented radiation from the Loop; and the unusually fine design and construction of the IF coils. The "X" in the name of the labs at Camp Vail was the U.S.Army's designation for "Experimental", and it would follow that Pressley and his crew had the time and the funds to really come up with the best of the art.

The bridge-balancing was based on the Wheatstone. Previously, a

PRESSLEY SUPER-HET, 1925; Sht. 2

potentiometer was used to control or adjust IF amplifiers. The rheostat shown on the schematic sketch was used for Volume only. However, it was admitted in Letters To The Editors, that many a home-constuctor was experiencing trouble in securing a proper balance of the bridge-circuit. The theoretical circuit is shown below:

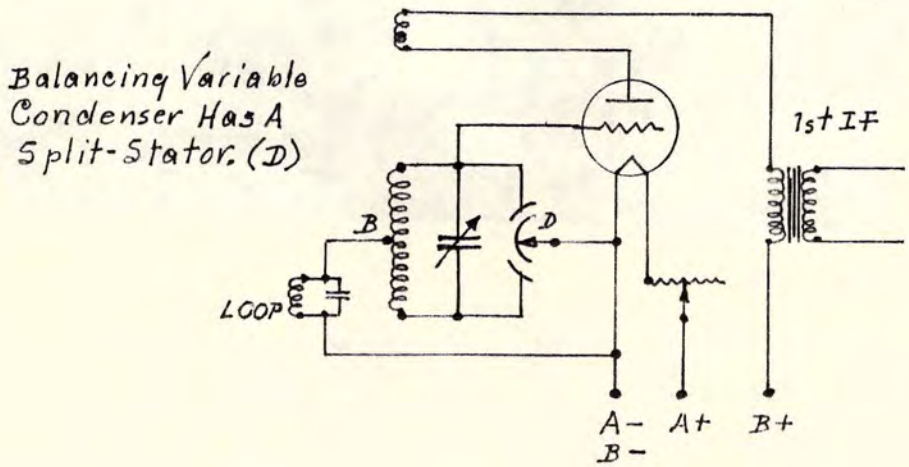

When balance was struck via the split-stator balancing condenser, no voltage existed between points (B) and (D), due to oscillation of the tube. Absolute zero was impossible, of course, but any coupling between the loop and the OSC coil was extremely small.

The Pressley super-hets did not squeal, howl, or whistle during tuning. They were touted as tuning as quietly as a well-balanced Neutrodyne, which suggests a plus for the Hazeltine concept.

* * *
* *
*

PRESSLEY SUPER-HET, 1926; Sht.3

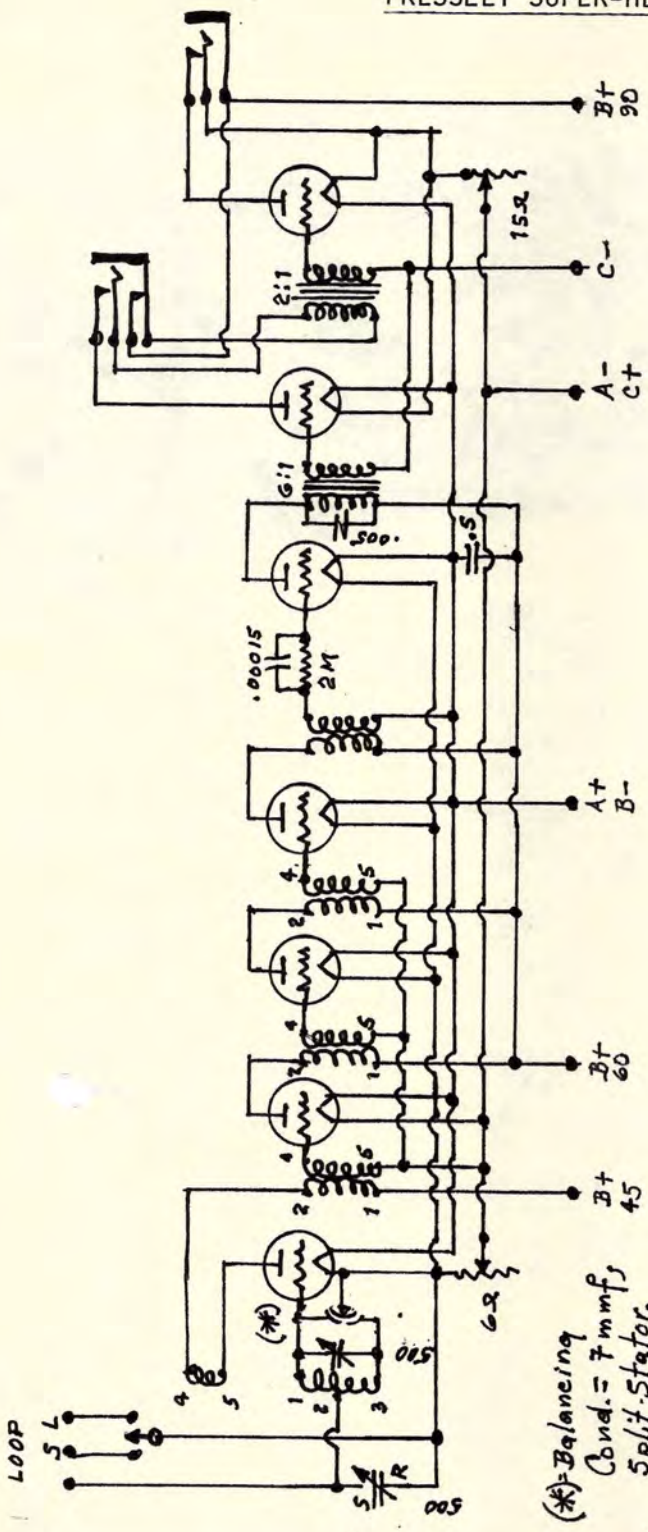

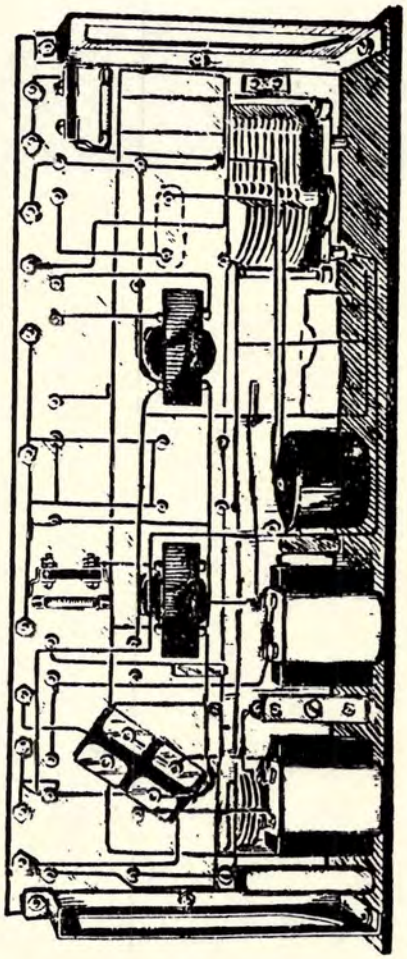

PRECISE "AUTOMATIC CONTROL" SUPER-HET, 1926;Sht.1

Langbein-Kaufmann Radio Company of New Haven were long time manufacturers of tuners, sets, and kits. Their trademark was first "L&K", then became "ELKAY". In 1926 they set about a massive advert campaign for their automatic filament control resistances. This was probably in competition with the well-known "Amperites" from the Radiall Company which had been introduced the year before. Later, everyone seems to have "gotten into the act", as such resistances were subsequently offered by such as Lynch, Muter, DeJur-Amsco.

L&K joined with Precise Mfg. Co. of Rochester in 1926 to create what can only be called a bastardised super-het circuit, shown over-leaf. It was a deliberate mixture of different tubes requiring different voltages - something never done and quite meaningless in terms of Radio, but obviously done to make an elaphantine point for their filament control resistances, which they offered for most every tube extant.

This receiver is included in this work primarily for its academic and historical interest. I do not recommend you to constructing it. The little 5-tube TRF produced by L&K under the label ELKAY was a neat outfit and worked, and is fun to play around with.

You will note a gadget labelled "Filtoformer", an item offered by Precise. It was essentially an RFC glorified, and a conventional RFC could be substituted with no ill effects, on the order of 200 mH.

2

PRECISE "AUTOMATIC CONTROL" SUPER-HET, 1926; Sht. 2

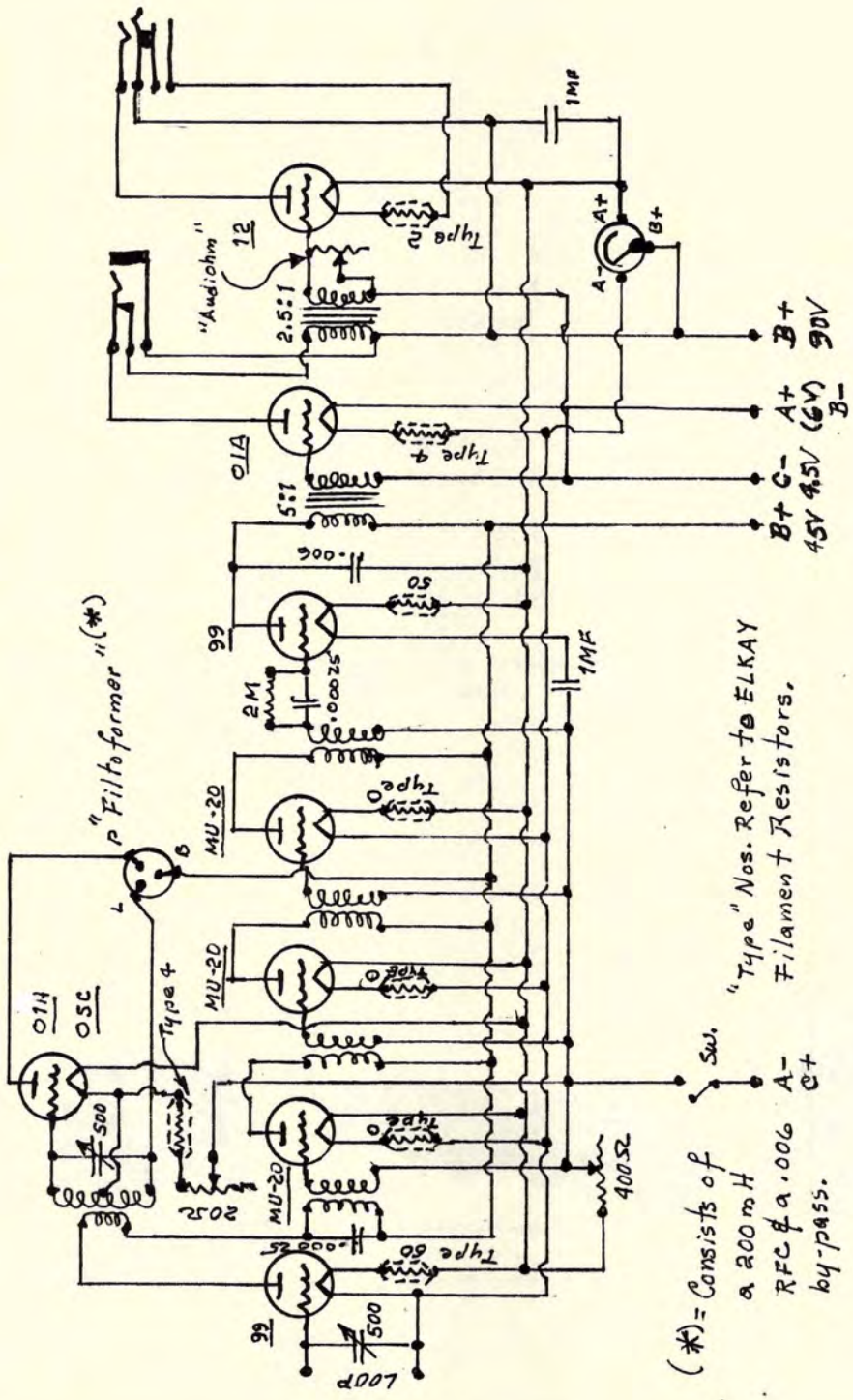

PRECISE "AUTOMATIC CONTROL" SUPER-HET, 1926; Sht. 3

Major Parts List:

Precise Multiformer 1700.
Filtroformer 1900.
AF Transformers 480 (2).
500 mmf Variables SLF (2).
Precision Inductocoupler 260 (Osc.).
Remler #50 Sockets (8).
Elkay Resistances As Noted.
Jewell 55 Dual Voltmeter.
Daven 2M-ohms Leakdenser.
Jones Colour Plugs (2) *
Apex Vernier Dials, 4".
Electrad "Audiohm".
Granio Kramer Binding Posts (7)**
Dubilier & Yaxley Accessories & Hardware.

* = So called because the plug had a carboard wheel pasted to it, with coloured segments identifying which wire went to which prong.

** = This is the only reference to Granio Kramer I have ever encountered. If you know anything about them, I'd like to hear of it.

Panel = 7" x 28" x 3/16".
Baseboard = 9" x 27" x 1/2" (Wood).

* * *

Precise Filtoformer
Price $4.50

Precise Super-Multiformer
Four accurately matched transformers in one. Price, $20.00

Precise Super-Size No. 480 Audio Transformer
Two ratios—5 to 1, 2½ to 1. Price, either ratio, $7.50

Sht. 1

REMLER
29
Shield Grid Kit

The derivation of the Remler 29 is obvious when you look at the Sargent-Rayment Seven; also Best's 115 KC superhet. That all three came out of the house of Gray & Danielson undoubtedly had an influence.

The Remler 29 used plug-in RF coils and for the first time introduced their massive AF transformers. Where the then practice was to encase transformers in steel, aluminum, copper, or Bakelite, the casings for the Remler 29 AF transformers were actual castings, with one-eighth walls. They were also rather heavy.

The power supply was also a new configuration. It went through two versions, chiefly for appearances, and you will find both versions detailed in the "Infradyne/Remler" Monograph. It could be used with practically any receiver, other than the Remler 29. I have built three of them and have been impressed by all of them.

As for performance, the Remler 29 will do what was originally claimed for it. Under the proper conditions, it will bring in the world. If you have one, restore it; if you have parts, construct it. You'll be impressed, also.

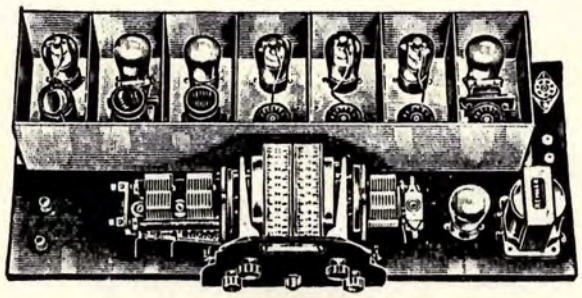

(#77.18)

REMLER
29
SHIELD GRID RECEIVER

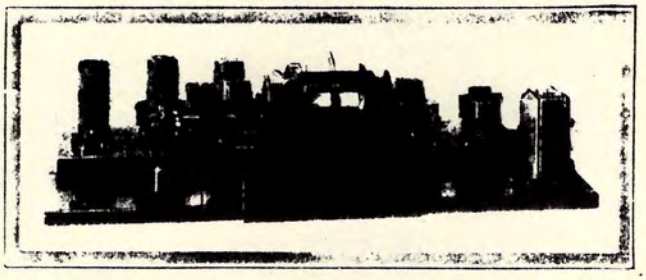

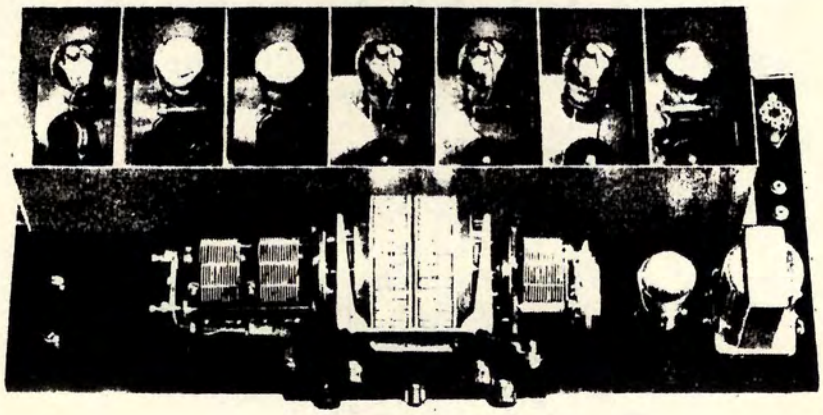

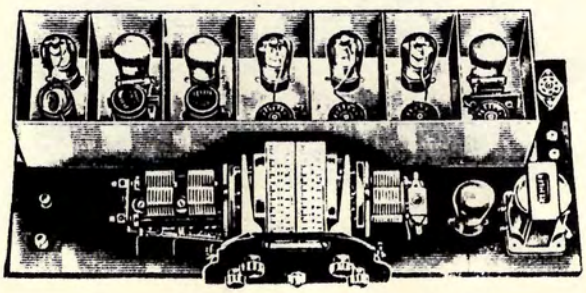

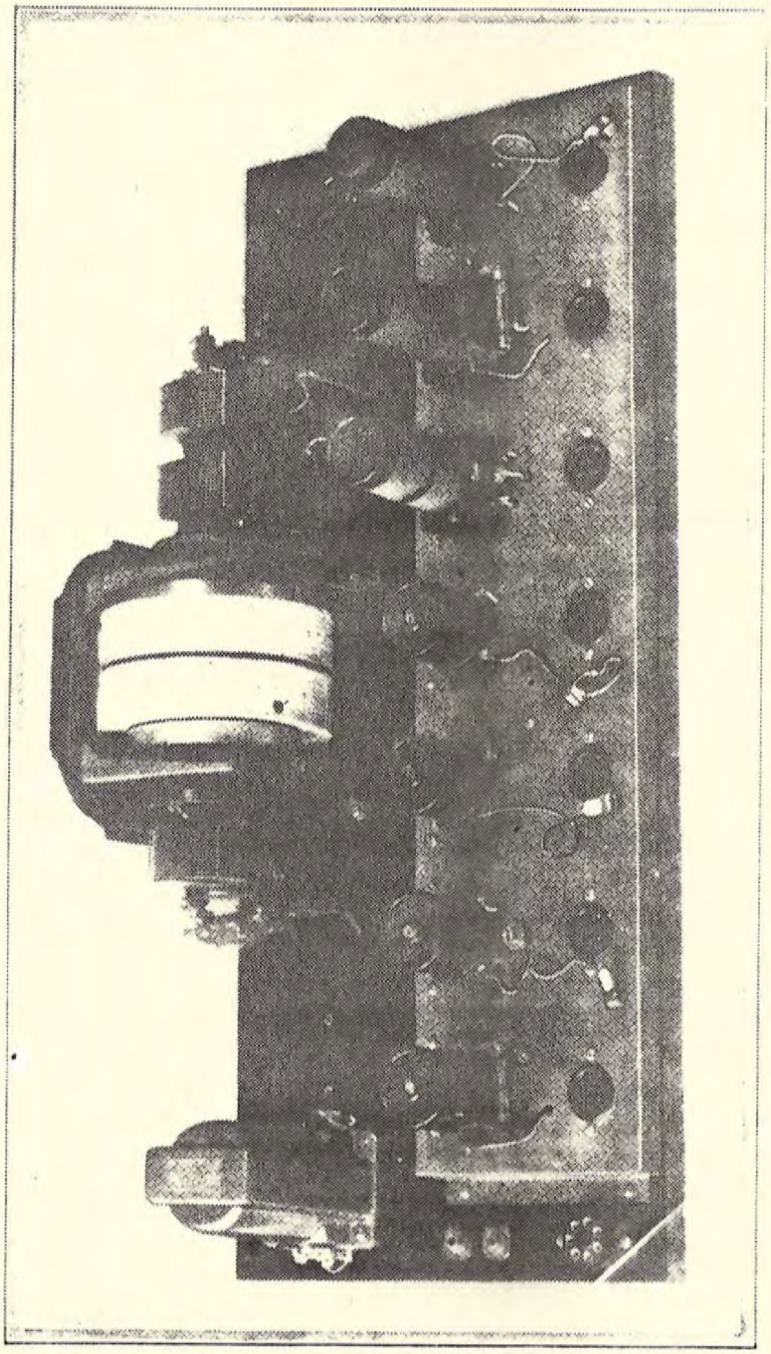

List of Parts Required

1—Remler No. 712 Amplifier Unit	$ 70.00
1—Remler No. 752 Foundation Kit	15.00
2—Remler No. 110 Drum Dials	9.00
1—Remler No. 632 Two Gang Condenser	12.00
1—Remler No. 632 Condenser	5.00
1—Remler No. 920 Audio Transformer	12.00
1—Frost No. 780 Cable Plug	2.25
1—Frost No. 782 Cable Plug Socket	.75
1—Frost No. 1895 Volume Control	2.00
1—Frost No. 1896 Regeneration Control	2.25
1—Frost No. S1910 Rheostat and Switch	1.00
LIST PRICE	$131.25

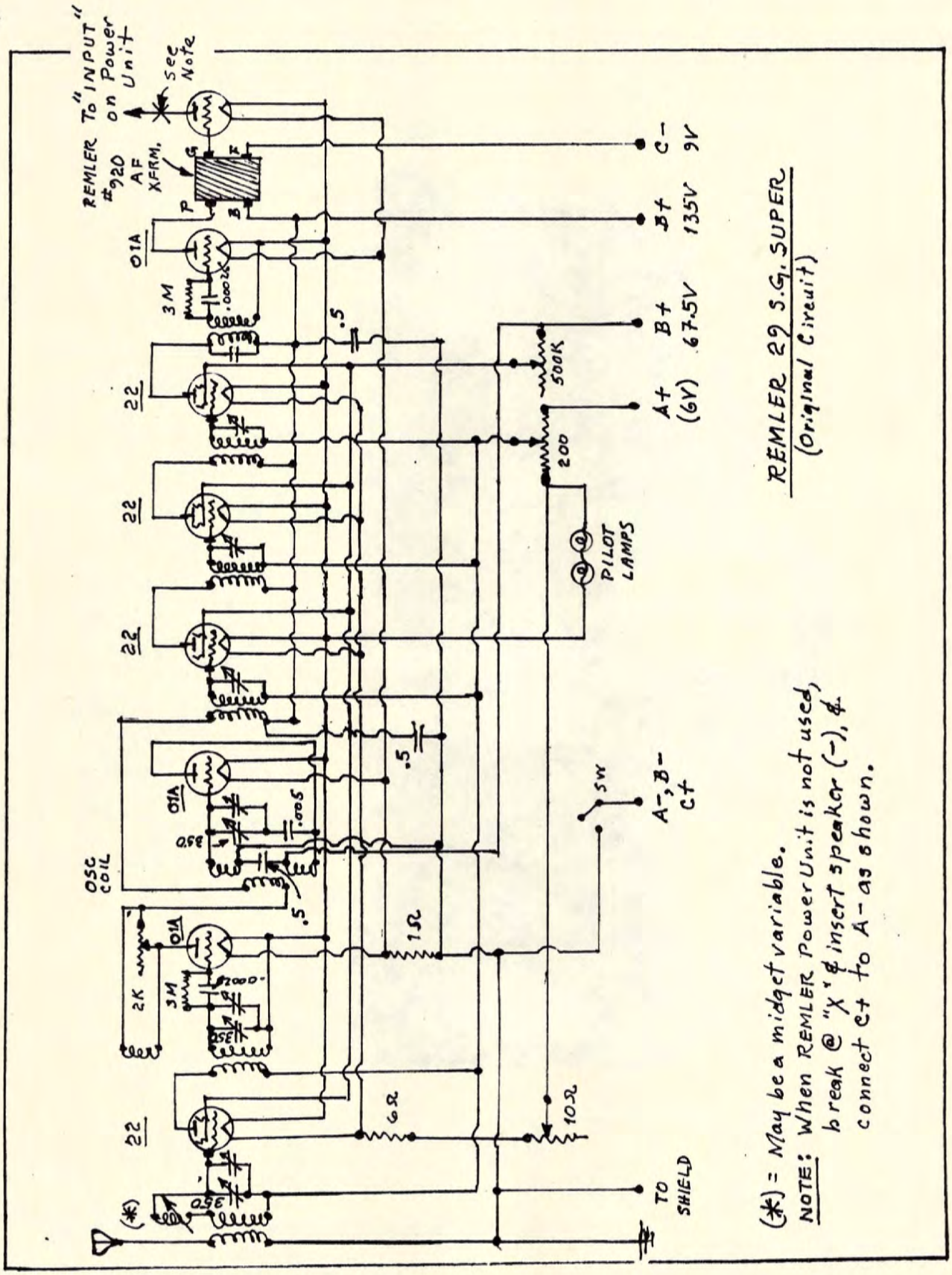
REMLER 29 S.G. SUPER
(Original Circuit)
(*) = May be a midget variable.
NOTE: When REMLER Power Unit is not used, break @ "X" & insert speaker (-), & connect CT to A- as shown.
REMLER #920 AF XFRM.
To "INPUT" on Power Unit
See Note
01A
22
3M
.0002
.5
500K
200
PILOT LAMPS
A+ (6V)
B+ 67.5V
B+ 135V
C- 9V
SW
A-, B- CT
TO SHIELD
OSC COIL
.005
2K
1Ω
6Ω
10Ω
(*)

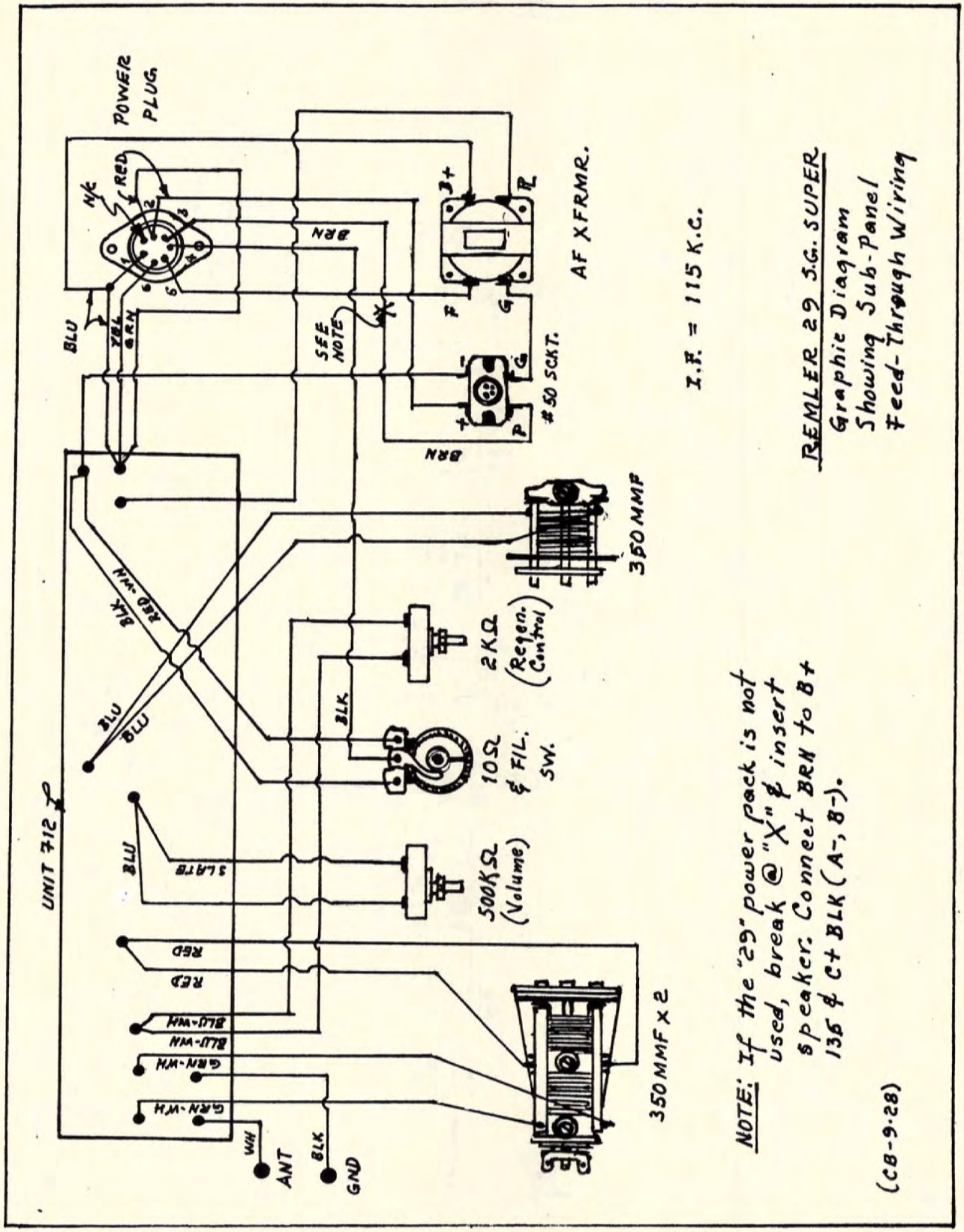
POWER PLUG
N/C
RED
BLU
YEL
GRN
BRN
SEE NOTE
X
B+
AF XFRMR.
#50 SCKT.
I.F. = 115 K.C.
350 MMF
2KΩ (Regen. Control)
10Ω & FIL. SW.
500KΩ (Volume)
BLK
BLU
RED-WH
BLK
UNIT #12
SLATS
RED
BLU-WH
GRN-WH
WH
ANT
GND
350 MMF x 2
REMLER 29 S.G. SUPER
Graphic Diagram
Showing Sub-Panel
Feed-Through Wiring
NOTE: If the "29" power pack is not used, break @ "X" & insert speaker. Connect BRN to B+ 135 & C+ BLK (A-, B-).
(CB-9-28)

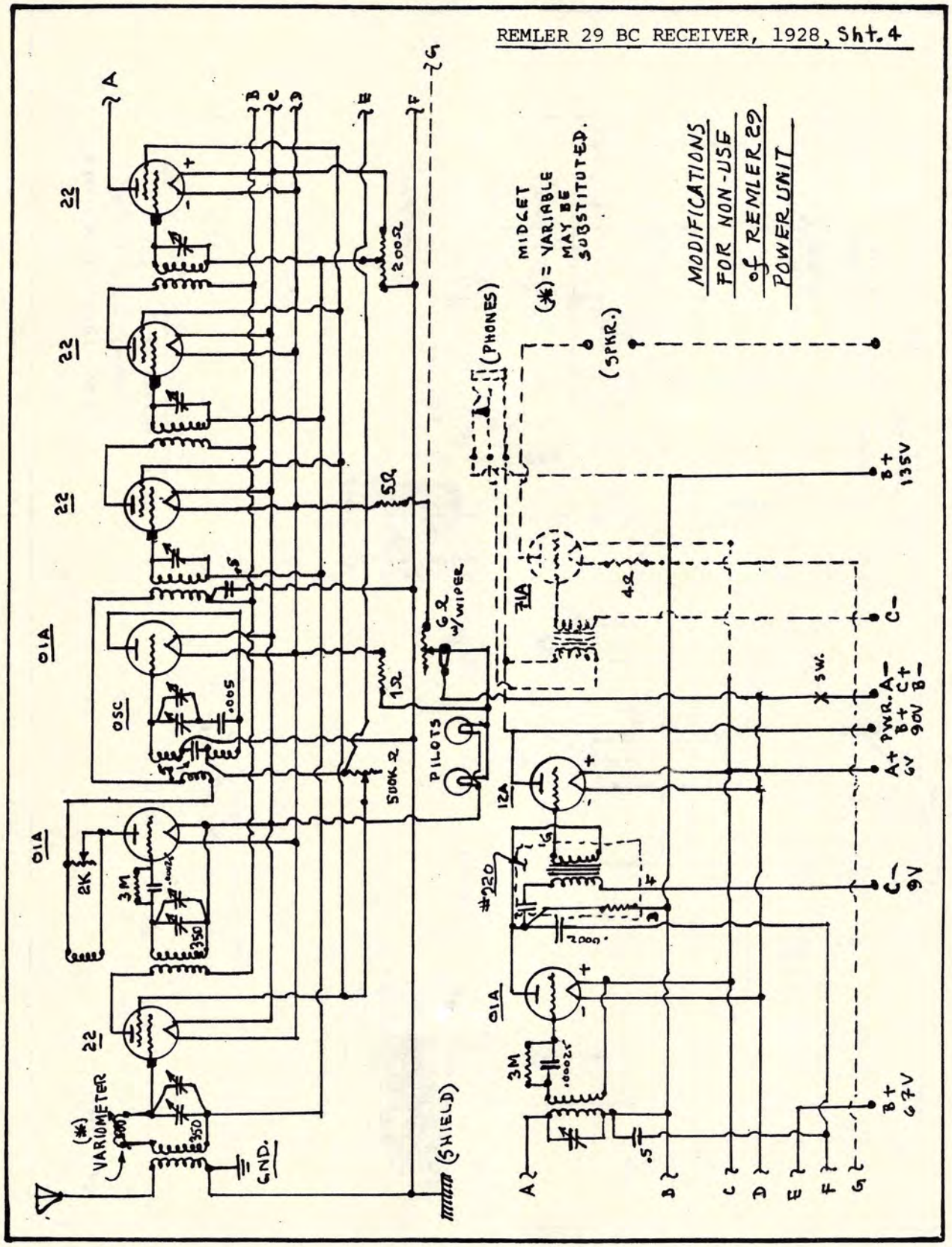
REMLER 29 BC RECEIVER, 1928, Sht. 4
MODIFICATIONS FOR NON-USE of REMLER 29 POWER UNIT
(*) = MIDGET VARIABLE MAY BE SUBSTITUTED.
(PHONES)
(SPKR.)
VARIOMETER
GND.
(SHIELD)
OSC
PILOTS
6Ω w/WIPER
500K Ω
2002
5Ω
1Ω
4Ω
#220
SW.
B+ 135V
C-
A+ PWR. A-
6V B+ C+
90V B-
C- 9V
B+ 67V

REMLER 28 POWER COMPACT #950

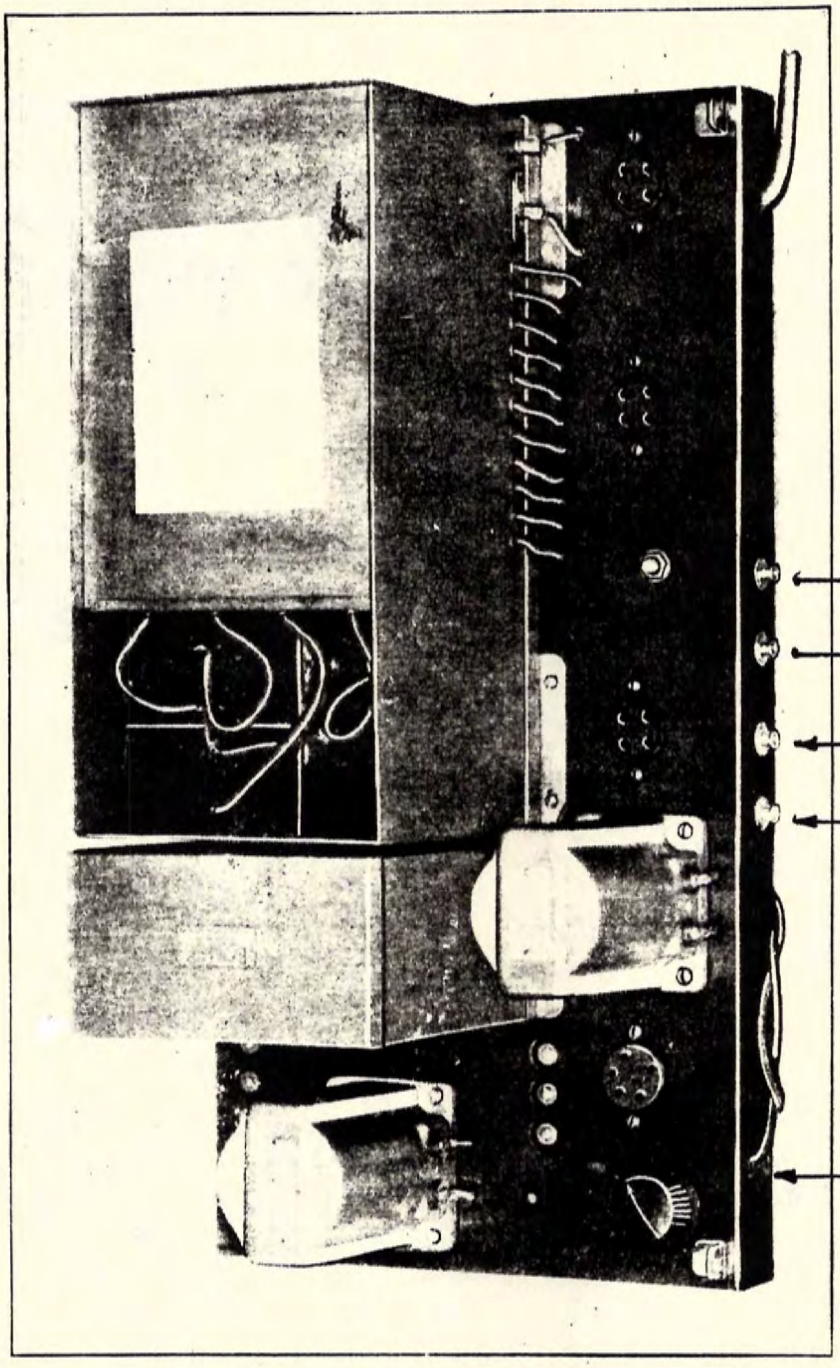

List of Parts Required

1—Remler No. 950 Power Transformer and Choke	$ 45.00
1—Remler No. 952 Foundation Kit	12.00
1—Remler No. 921 Audio Transformer	12.00
1—Remler No. 923 Output Impedance Compensating Transformer	20.00
1—Frost No. 300 Resistance Kit	9.00
3—Frost No. 1405 2 Mfd. Heavy Duty Filter Condensers	12.00
2—Frost No. 1105 2 Mfd. By-pass Condensers	4.00
LIST PRICE	$114.00

REMLER 29 POWER AMPLIFIER: 2 VERSIONS (1928/1929)

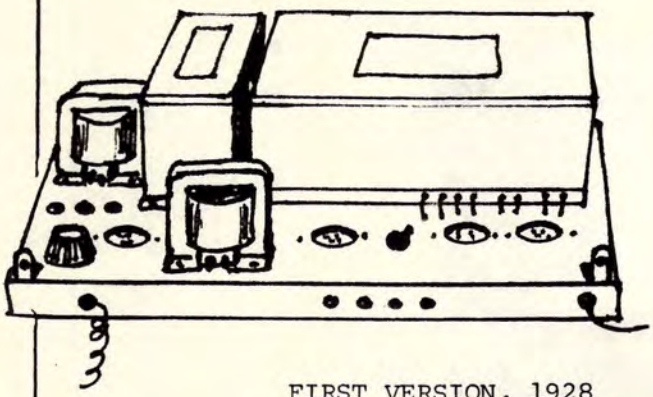

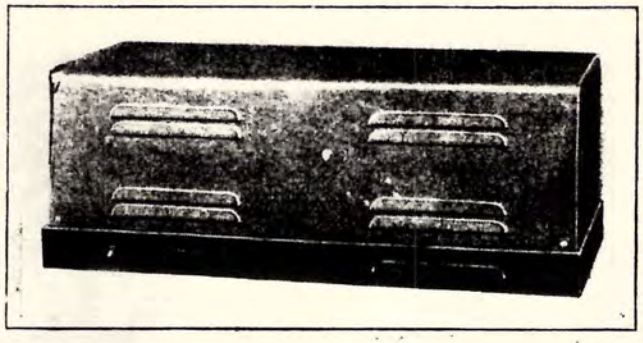

FIRST VERSION, 1928

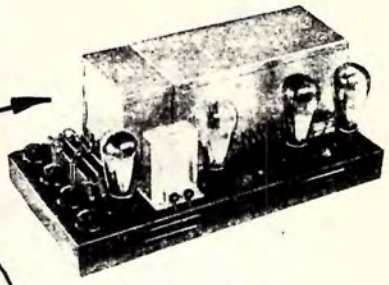

Power Amplifier for the REMLER "29"

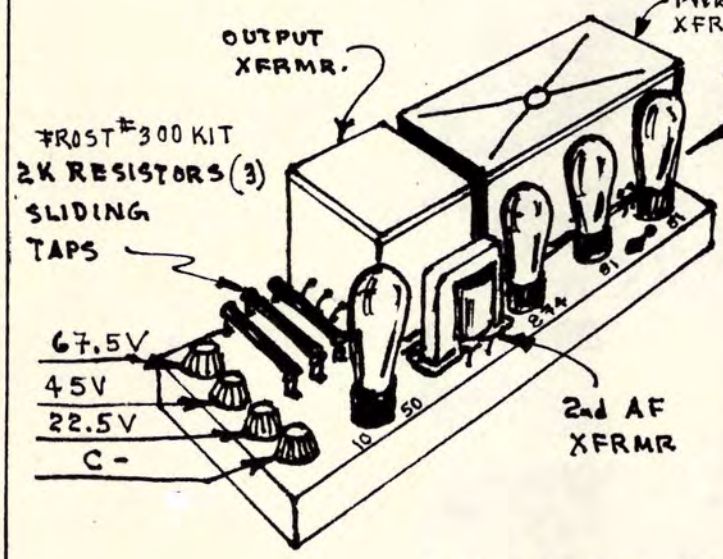

SECOND VERSION, 1929

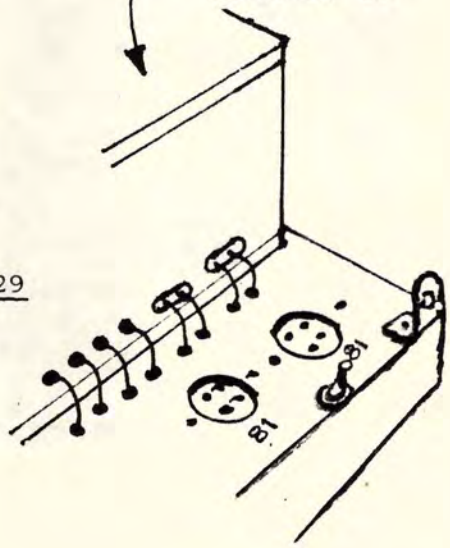

STEEL CHASSIS = 10.5" x 20" x 2.5"

REMLER 29 POWER AMPLIFIER; 1st VERSION

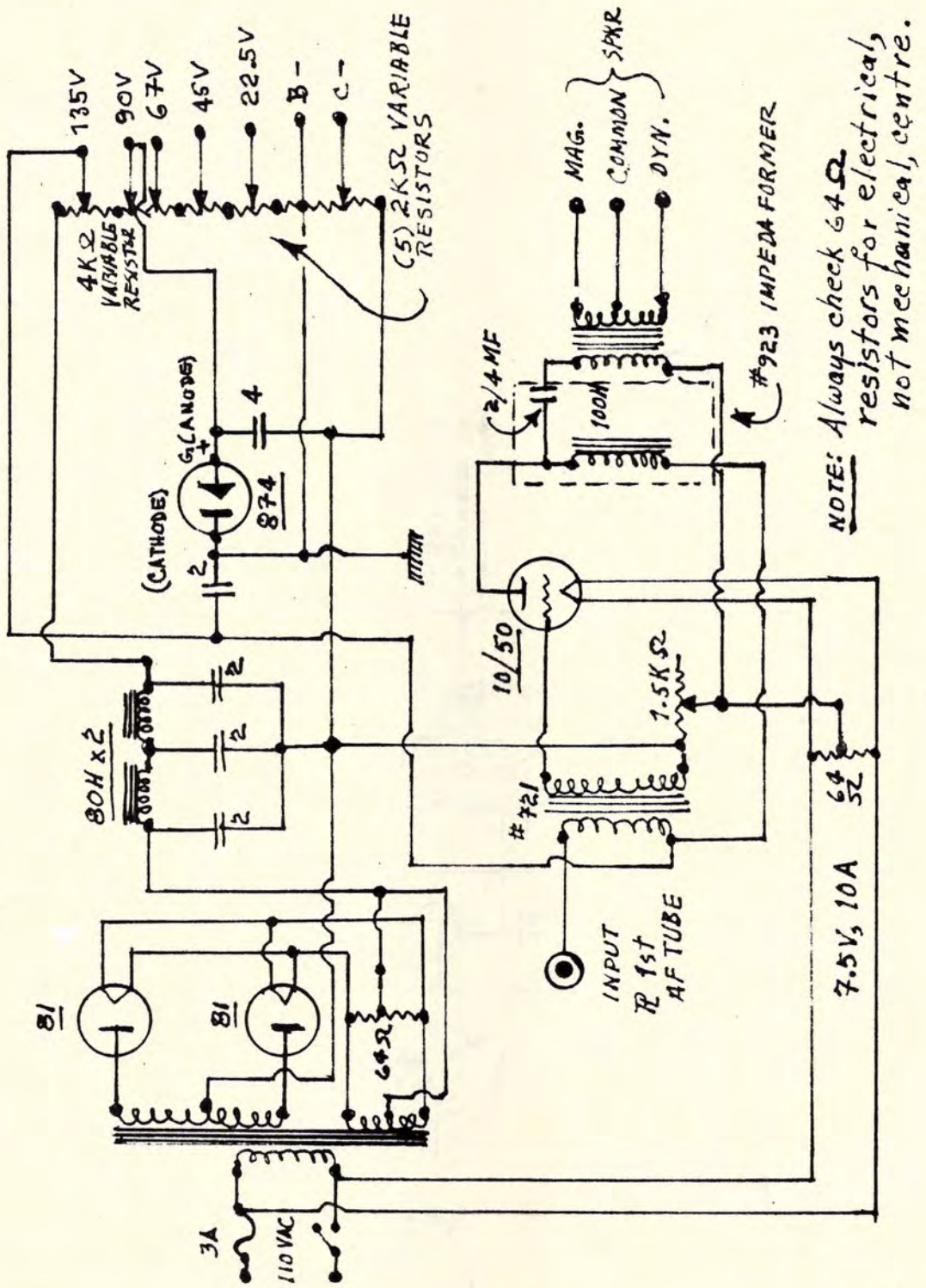

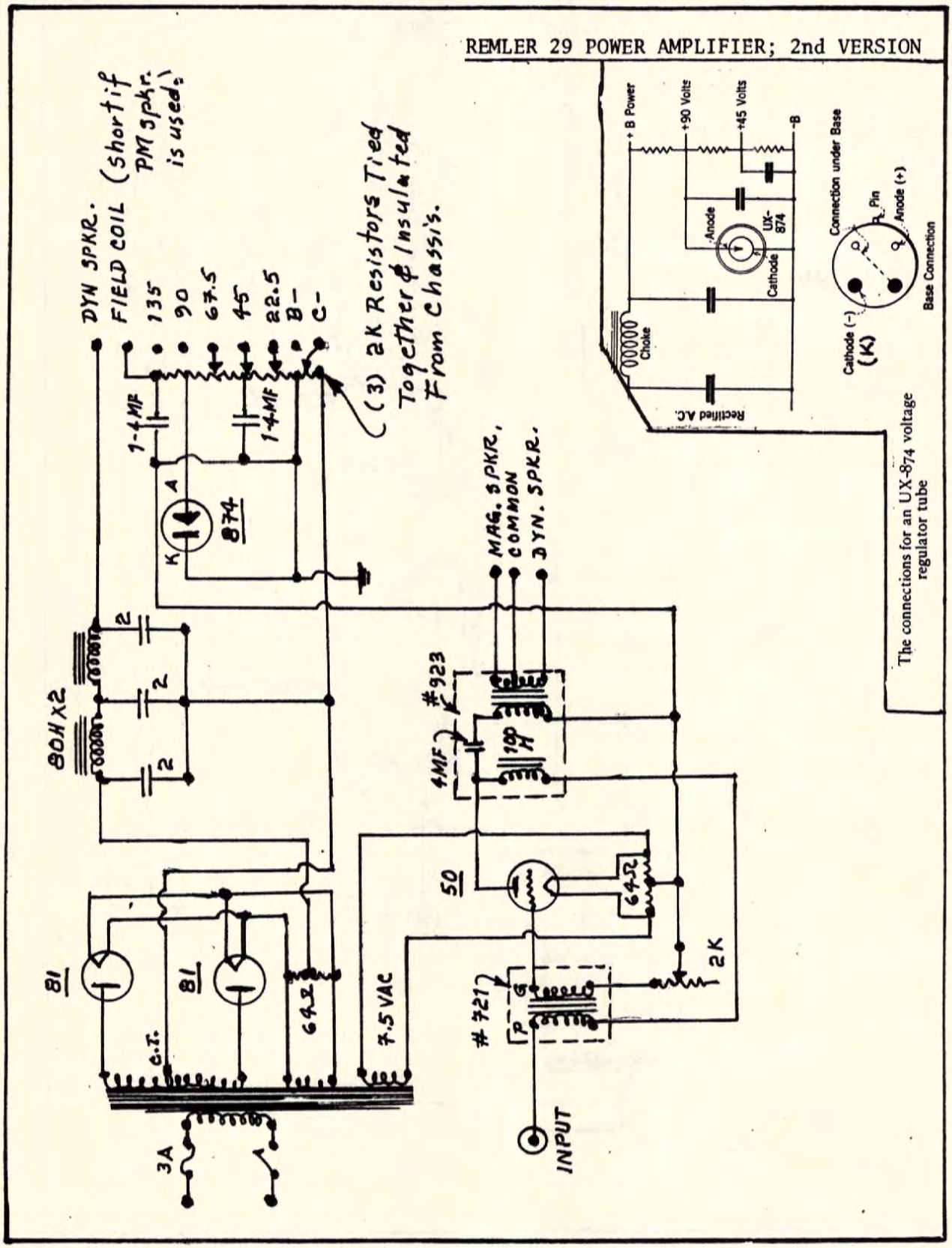
REMLER 29 POWER AMPLIFIER; 2nd VERSION
DYN SPKR. FIELD COIL
(Short if PM spkr. is used.)
135
90
67.5
45
22.5
B-
C-
(3) 2K Resistors Tied Together & Insulated From Chassis.
1-4MF
1-4MF
874
K
A
80H x2
2
2
2
81
81
C.T.
6.3Ω
7.5 VAC
3A
MAG. SPKR.
COMMON
DYN. SPKR.
#923
4MF
190 H
50
6.3Ω
2K
#721
P
G
INPUT
+ B Power
+90 Volts
+45 Volts
-B
Anode
UX-874
Cathode
Choke
Rectified A.C.
Connection under Base
Pin
Anode (+)
Cathode (-)
(K)
Base Connection
The connections for an UX-874 voltage regulator tube

REMLER 29 POWER AMPLIFIER, 1929
(3rd Version)

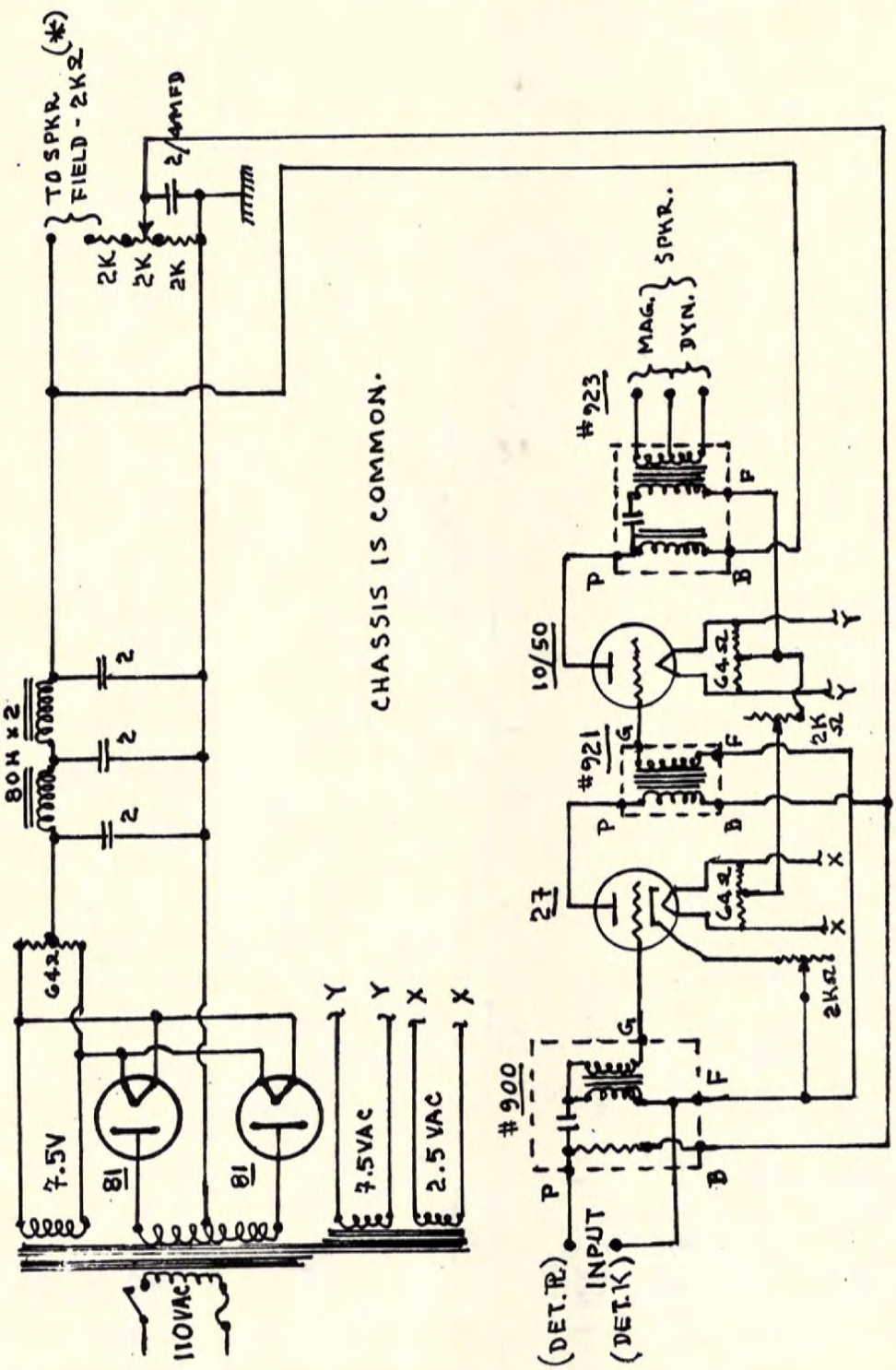

(*) = Bridge For PM Speaker.
Input is across F & P Terminals.
Xfrmr. Was Resonated PRI Type.

REMLER 29 SCREEN-GRID POWER AMPLIFIER, 1928

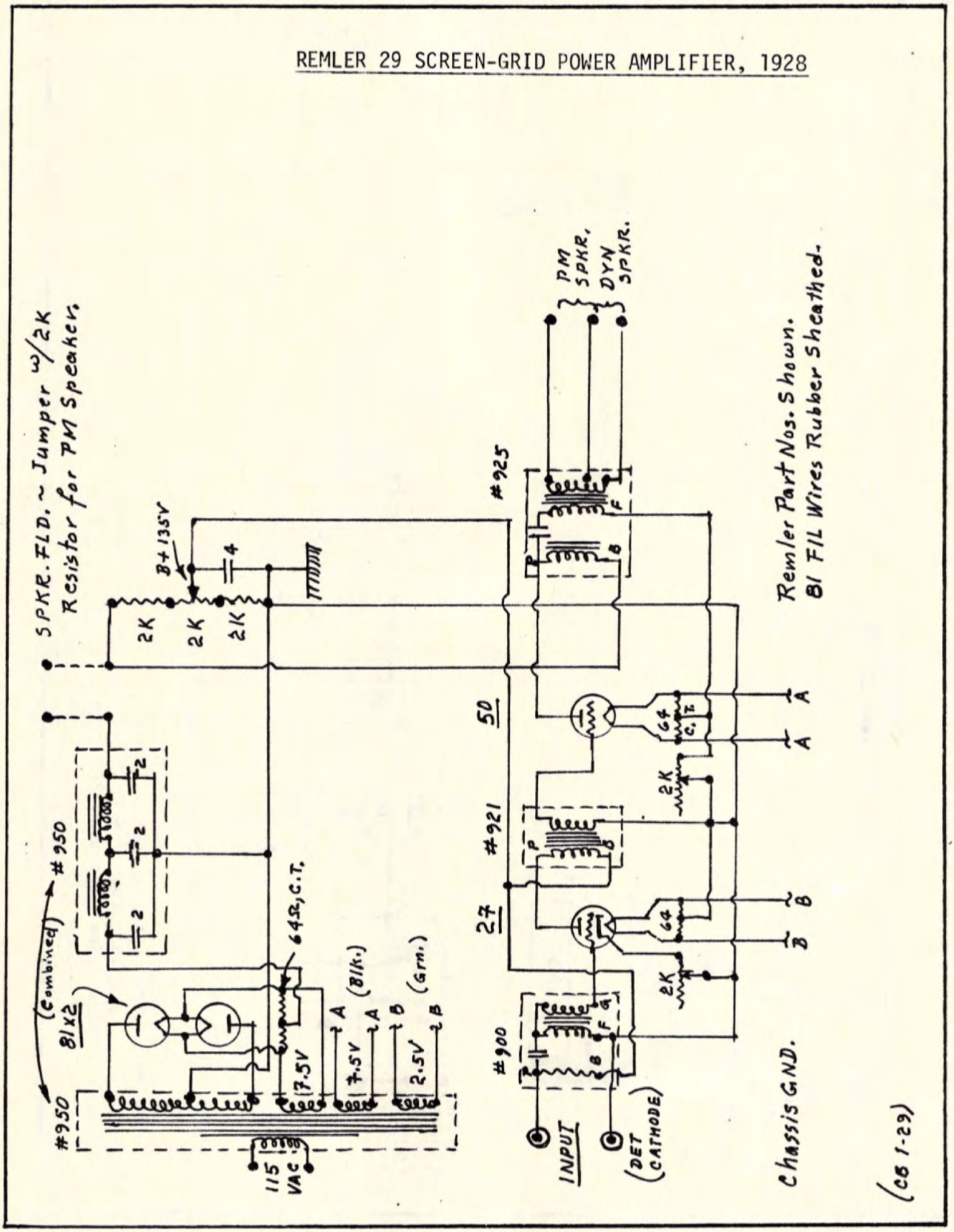

RAULAND (ALL-AMERICAN) FIRST SUPER-HET. 1925;Sht.1

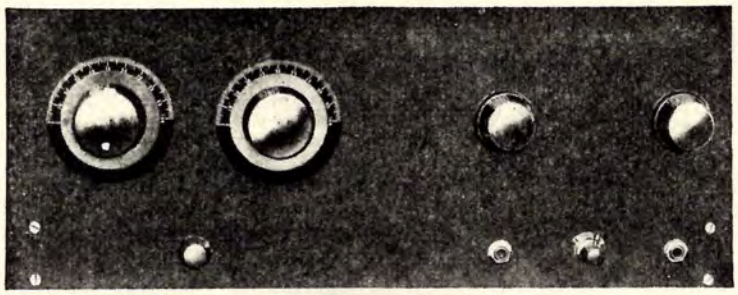

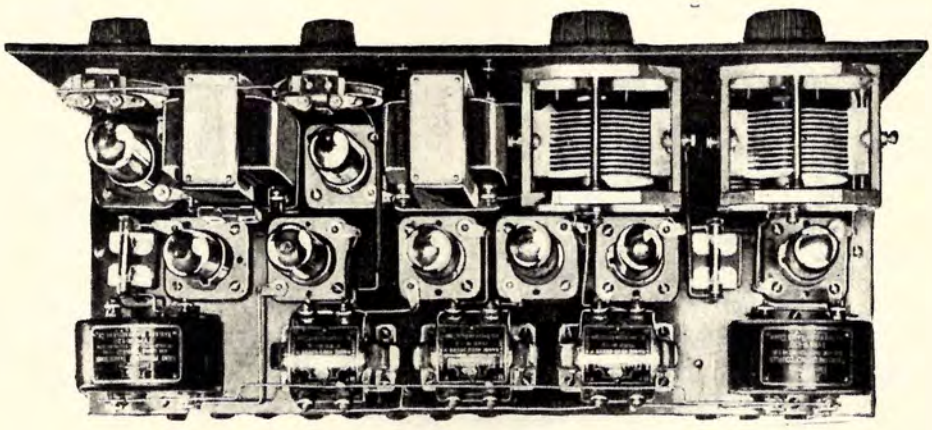

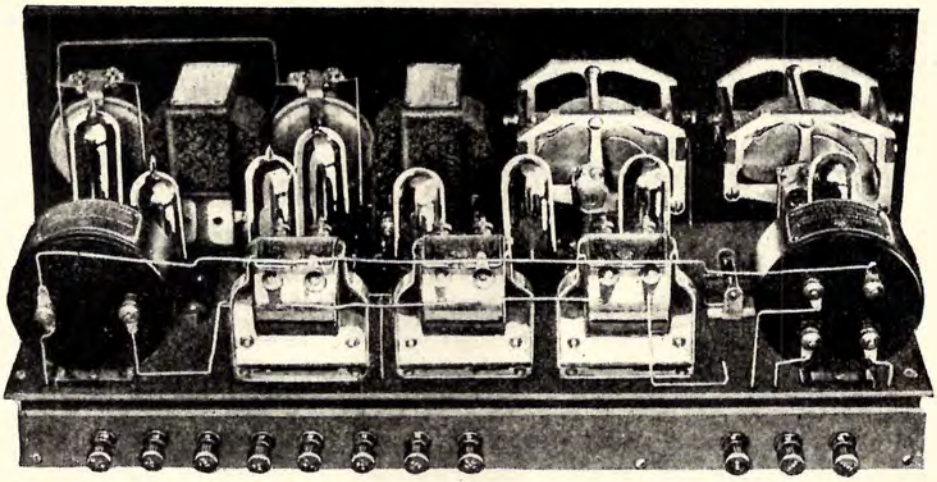

RAULAND (ALL-AMERICAN) FIRST 30KC SUPER-HET, 1925: Sht. 2

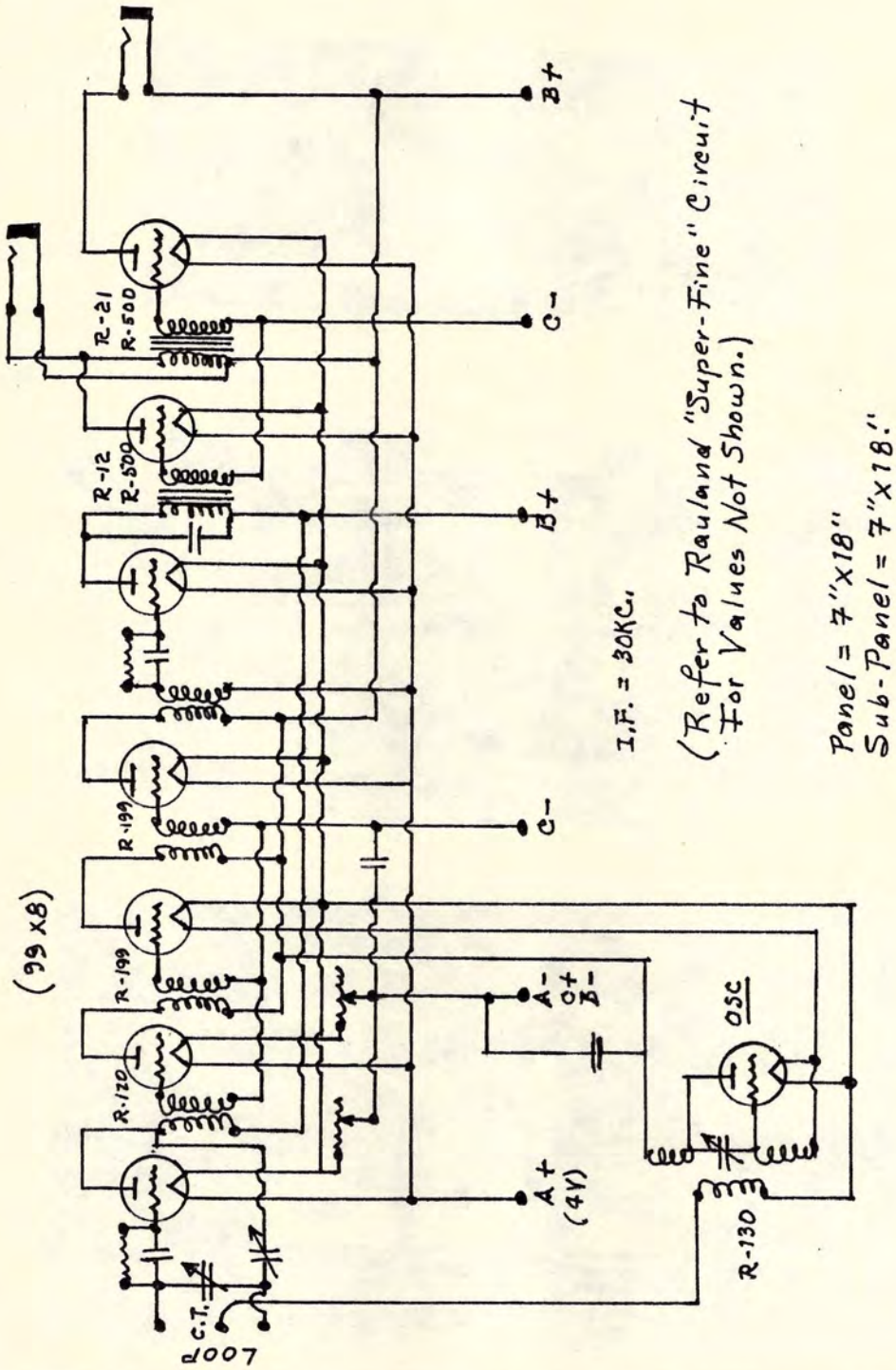

RAULAND (ALL-AMERICAN) "Super Fine" 30KC SUPER-HET, 1926;Sht.1

Rauland the man and "All-American", the company, like many other producers of single quality products, inevitably got around to having a go at producing radio sets such as one and two-tubers, reflex, the super-reflex, and TRF. All were offered as kits.

In 1925 Rauland offered a 30KC "miniature" super-het circuit - so-called because the panel was only 18" wide, compared with the then normal 30" panels for super-hets. That circuit is shown on the preceding pages, and the circuit shown here is of their best and final effort to climb onto the super-het band-wagon that was beginning to roll in the latter part of the Twenties.

The following Rauland items were offered in their kit, the items called for in the circuit not Rauland were off-the-shelf items by other manufacturers, selected by the home-constructor. The kit sold for $26:

R-10 = AF Transformer
R-20 = AF Transformer
R-110 = IF Transformers
R-120 = RF Filter
R-130 = Oscillator Coupler

In the cut shown above the variable condensers were Bremer-Tully's 500mmf type, consisting of 23 plates each.

RAULAND (ALL-AMERICAN) "SUPER-FINE" 30KC SUPER-HET, 1926. (Sht. 1)

After establishing a solid reputation for producing staid and dependable AF transformers, Rauland ventured into designing one and two-tube sets - reflex, super-reflex, TRF. The set detailed herein was their best effort to climb aboard the super-heterodyne band-wagon that was beginning to roll in the mid-Twenties. Their transformers were actually the only contribution they could make, even though you will spot a few "peculiarities" in the circuit over-leaf. The set might be considered as the "experimental" model of the subsequent Remler 45KC super-heterodyne - which, incidentally, was a better performing unit. The "Super-Fine" 30KC super-het was their and last effort to get into the big league of set manufacturers, and as such, does have a certain historical validity.

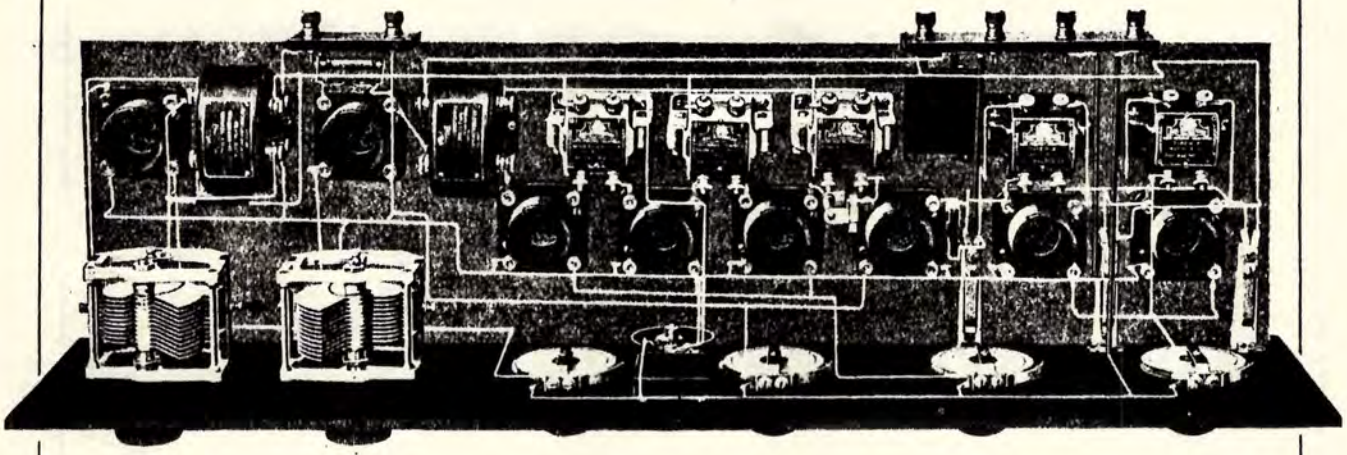

The .0005 MFD variables were Bremer-Tully units, and consisted of 23 plates, each.

The following Rauland items were offered as a kit to those desirous of constructing the "Super-Fine", and sold in 1926 for $26:

R-130 = Oscillator Coupler
R-120 = RF Filter
R-110 = IF Transformers
R-20 = AF Transformer
R-10 = AF Transformer

RAULAND ("All American") "Super Fine" 30 KC SUPER-HET:Sht. 2

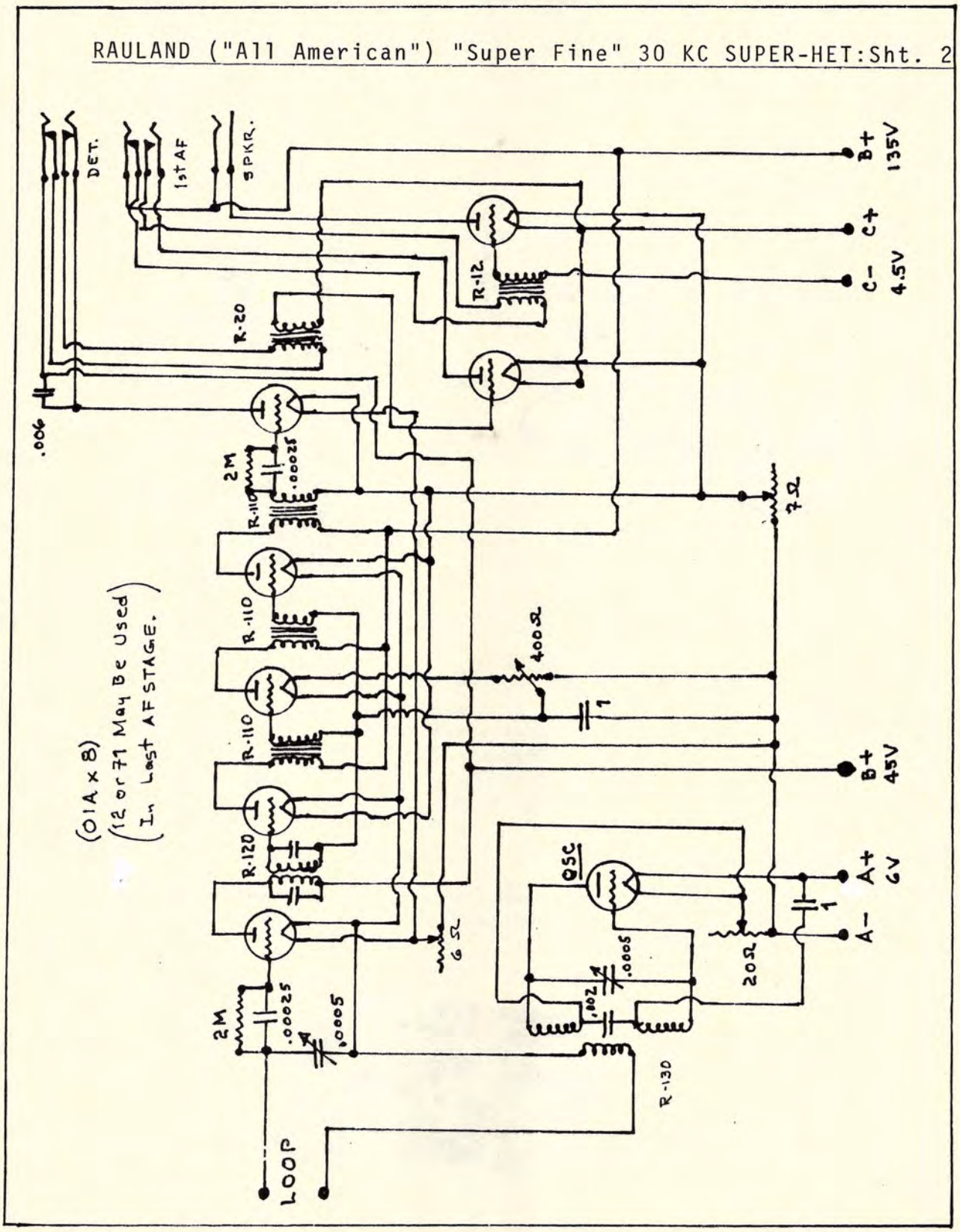

RAVEN SUPER-HET KIT, 1925; $25
Raven Radio Company, Albany, N.Y.
(Sht. 1)

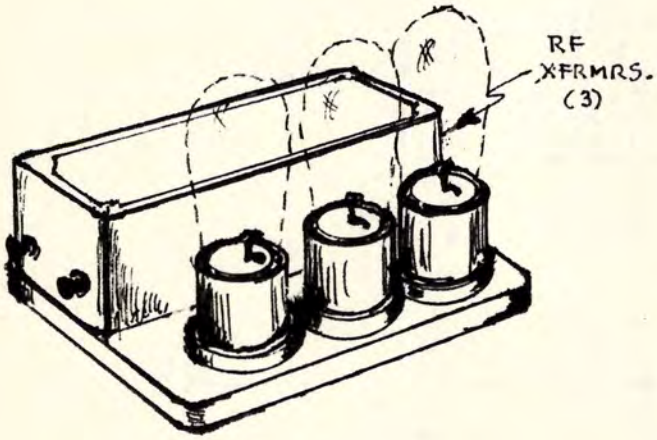

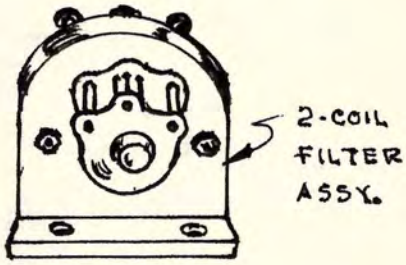

KIT CONSISTED OF:

2-Coil Filter Circuit.
RF Transformers (3).
Tube Sockets (3).
Oscillator.
Binding Posts.

Early Advert Copy:

"A complete compact monobloc RF long-wave length unit, perfectly matched, assembled, and wax-sealed in a Bakelite casing."

RAVEN SUPER-HET, 1926; Sht. 2

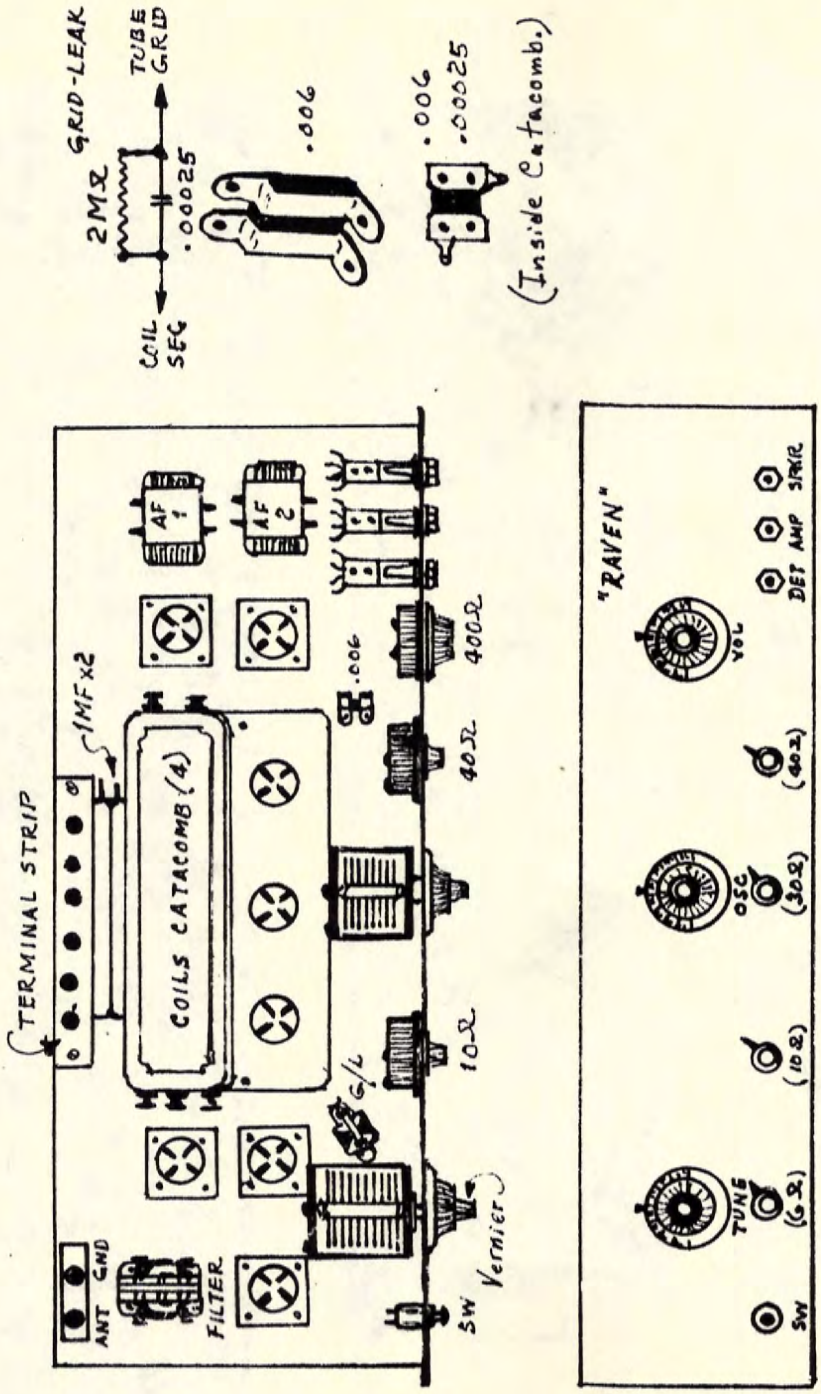

"RAVEN"
Super-Heterodyne
(1926)

GENERAL LAYOUT

Panel = 7" x 24".
Baseboard = 7" x 23".

RECEPTRAD SUPER-HET, 1924: Sht. 1
(Designed by Lt. Victor Greiff,USN.)

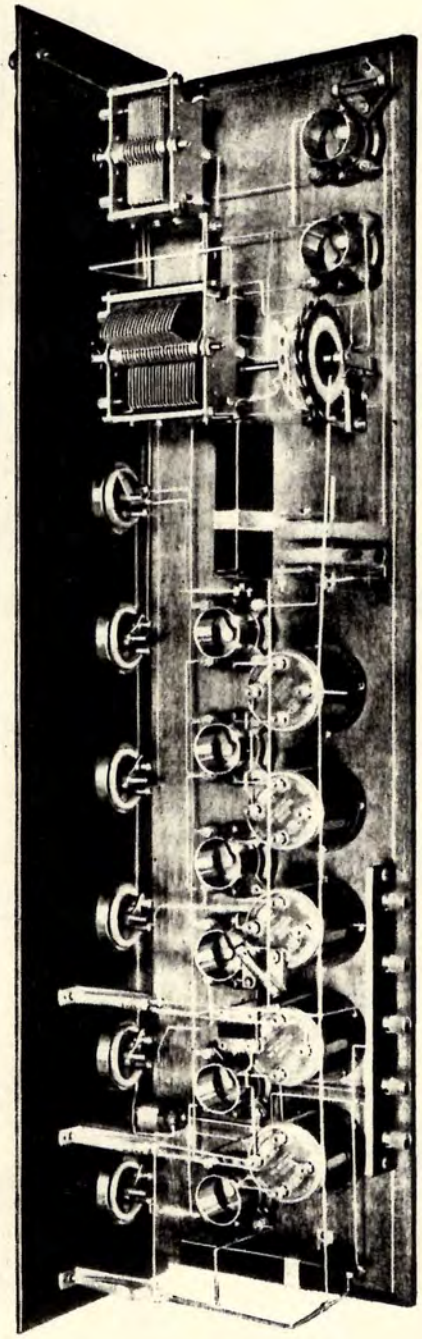

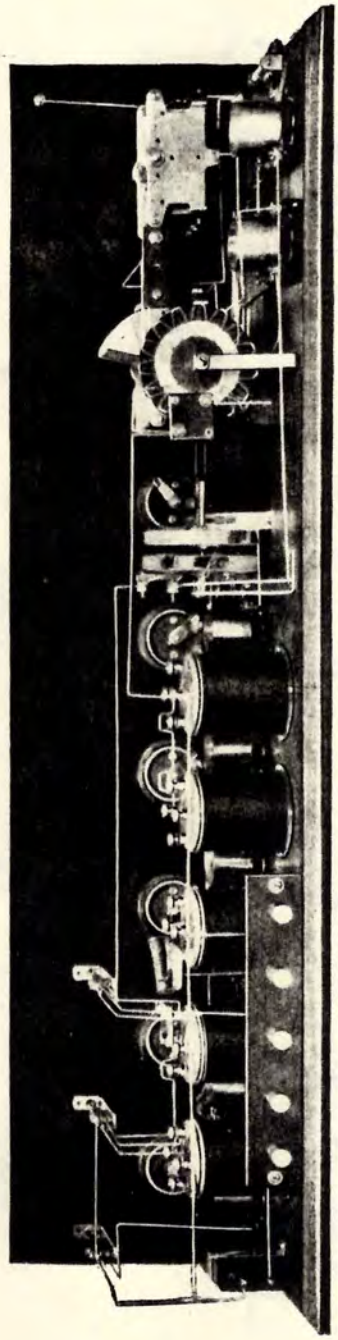

RECEPTRAD SUPER-HET, 1924; Sht. 2

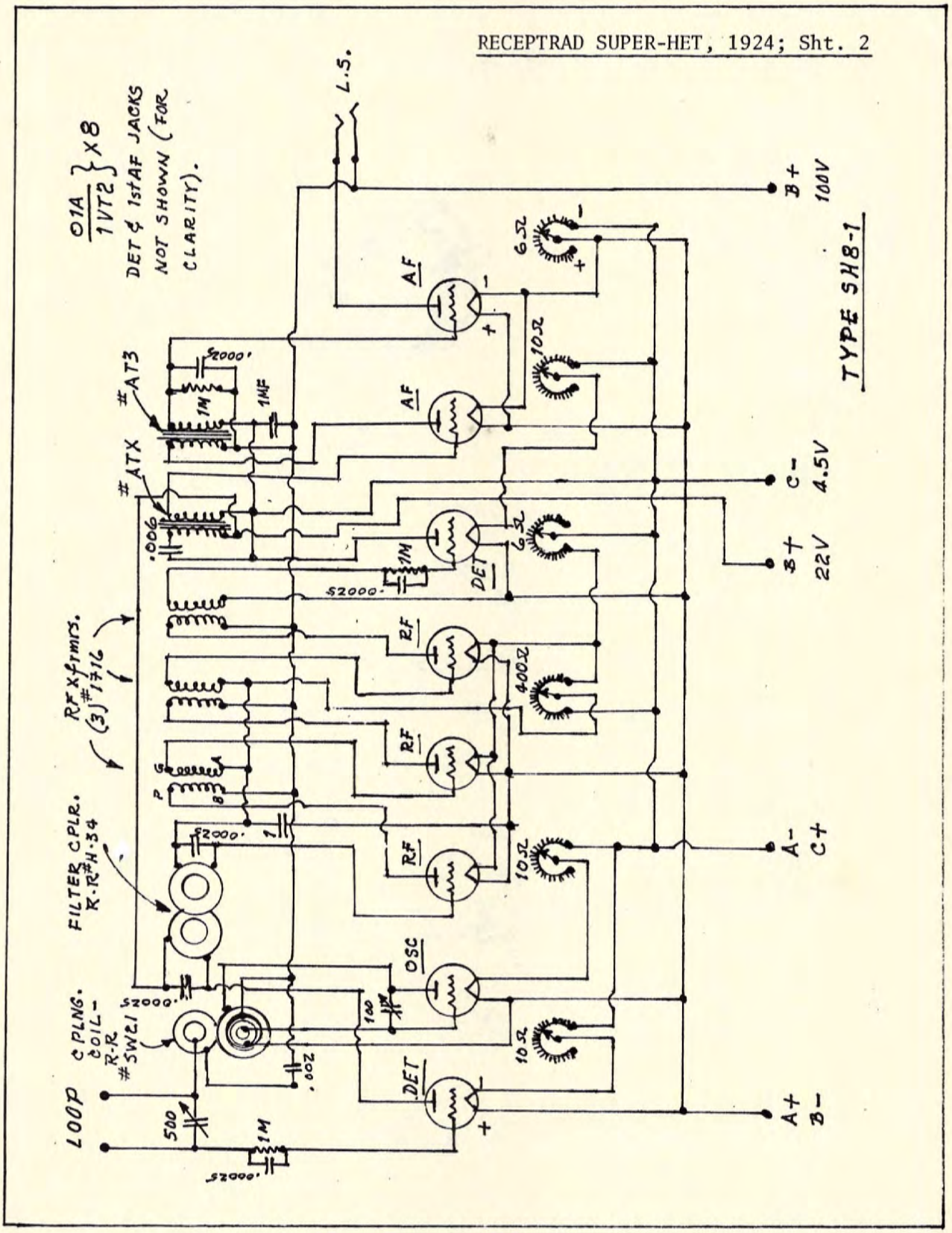

RECEPTRAD SUPER-HET, Sht. 3

R.R. Co. PRODUCTS

(RECEPTRAD)

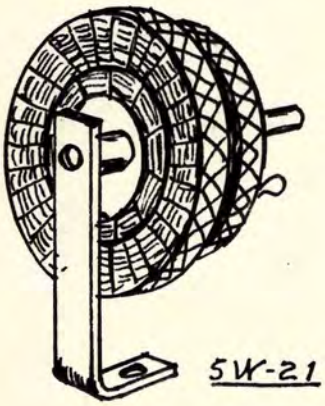

SW-21

"OSCILLO-COUPLER"
200-750 Meters - $6

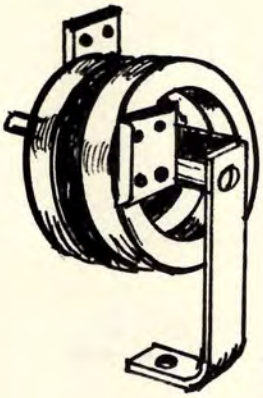

H-34

Tuned Filter
Cplr. - $7.50
8,500 Meters

Used in Grieff's Type SH8-1
Super-Het, 1924.
Not shown - RF-1716 RF Xfrmrs., 5,000 / 25,000 Meters,
3 req.; $8.50. (Similar to Baldwin, Remler, etc.

PARTS LIST

RF Xfrmrs., #1716 (3).
AF " , ATX & AT3. *
Filter Cplr. H-34.
OSC.- Cplr. SW-21.
Loop or Vario-Cplr.
10 Ω Rheostats (3)
6 Ω " (2)
Potentiometer - 500 Ω ±
100 mmf Variable (Gear-Driven)
500 " " , SLF
Tube Sockets (8)
Grid Leaks & Cond. (3)

Panel = 8" x 36" x 1/4".
Baseb'd. = 8½" x 35" x ½".
Fixed Condensers:
.00025 (2)
.002
.006
.001

1 MF, 1KV (2)

FIL Switch (G-H)
Jacks: (2) Double Circuit
(1) Single "

* = Have same configuration as #1716 cases.

THE RYAN DX-SEVEN SUPER-HET, 1925; Sht. 1

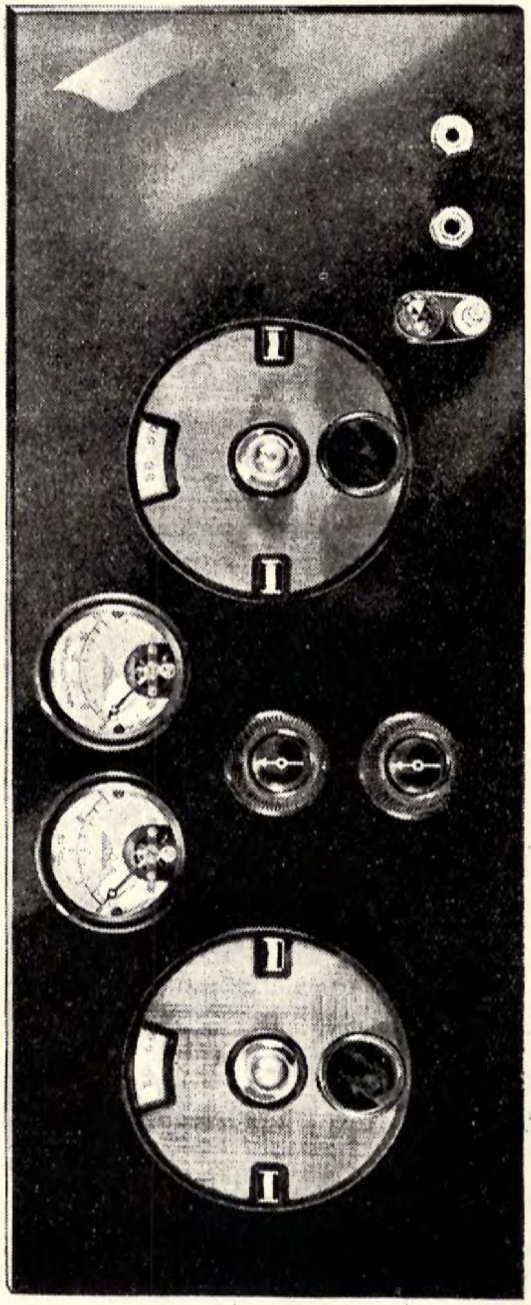

This set was billed as an efficient, economical, and easily constructed super-het, in the hey-day of the "D"-coil, 1925. While CELCO coils were specified by the designer, SICKLES, ELLIS, HENNINGER "D"-coils will be found to be just as good. The aristocrat of the "D"-coils, by ACME, can not be employed, for obvious reasons. While an original parts list will be found on Sheet 3, comparable parts may be substituted.

RYAN DX-SEVEN SUPER-HET, 1925: Sht. 2

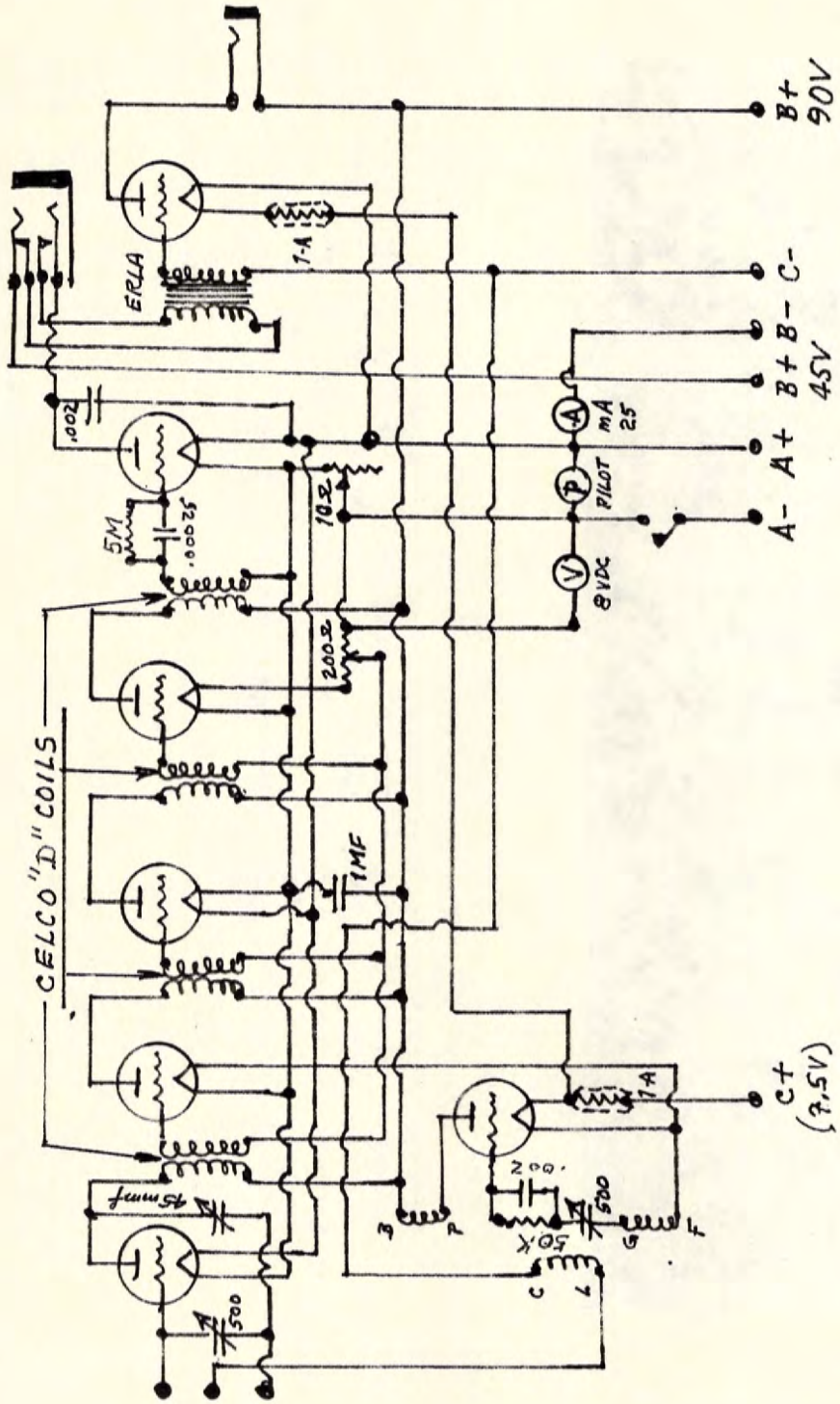

Designed by John G. Ryan, Chicago.
Pilot lamp was part of ON-OFF switch, called "Indicator Switch."

RYAN DX-SEVEN SUPER-HET, 1925; Sht.3

ORIGINAL MAIN PARTS LIST

1.	CELCO "D"-Coil Kit	$ 27.50
2.	BENJAMIN 500 mmf Variables (2)	10.00
3.	MAR-CO Vernier Dials, Nickel (2)	5.00
4.	BENJAMIN 7-Gang Tube Shelf	9.50
5.	BENJAMIN Sub-Panel Brackets	.75
6.	GLEASON Midget 14-Pl Variable, 45mmf (#)	1.50
7.	AMPERITES 1-A (2)	2.20
8.	CARTER RHEOSTATS, 6-Ω, 20-Ω	2.00
9.	CELCO Indicating Switch (ON-OFF)	1.35
10.	ERLA "Concert Grand" AF Xfrmr.	10.00
11.	BURGESS C-Battery, 7.5V	.85
12.	DAVEN "Leakaudenser", 5MΩ	1.00
13.	WALNART Binding Posts (8)	.88
14.	JEWELL Voltmeter, 8VDC	7.00
15.	JEWELL Milliammeter, 25mA	7.00
16.	CROWE Cable Markers (*)	.25
17.	Panel, 7"x18"	3.00
18.	BAKELITE Strip 1⅞"x17" (Coil Mount)	.75

(*) = Loop (3); A-; A+; B-; B+DET; B+AMP.
(#) = Mounted on 7-Gang Tube Shelf.
AJAX, AERO, LINCOLN, or VOLUMAX Loop may be used.

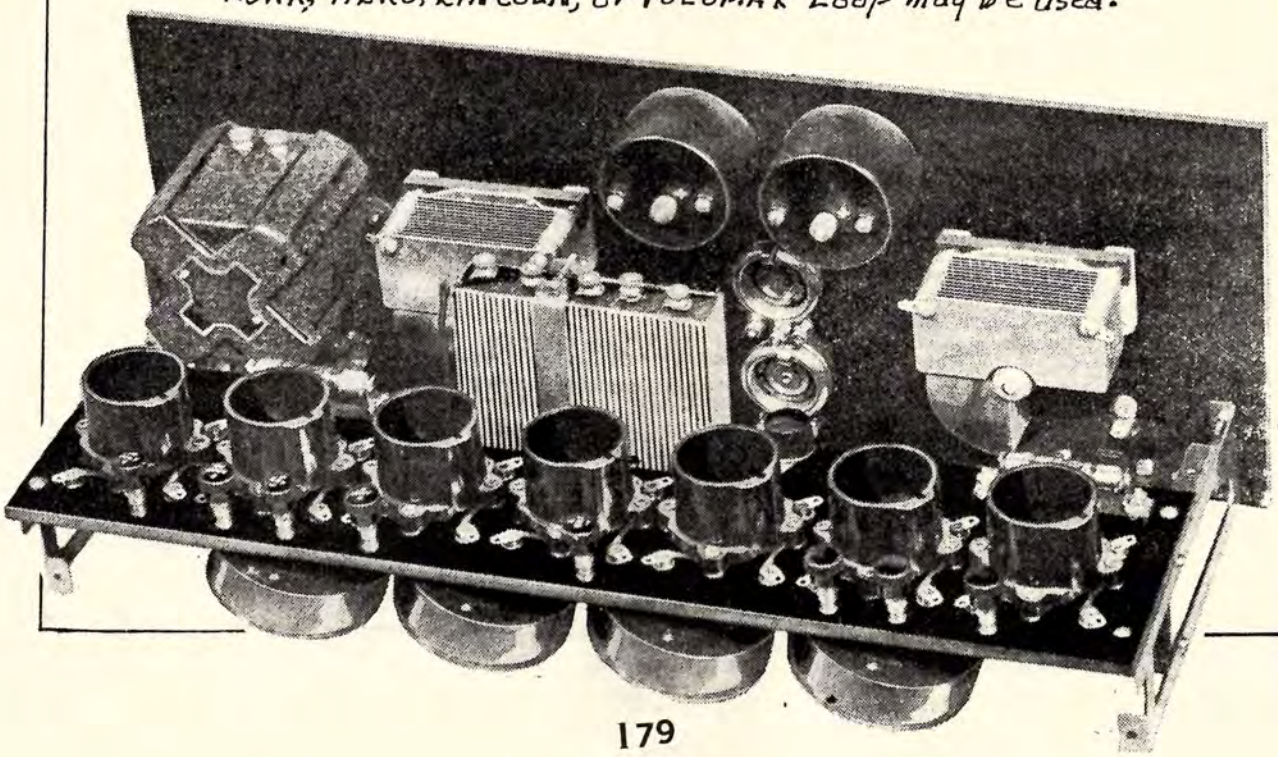

RADIO DIGEST's SUPER-HET, 1923; Sht. 1

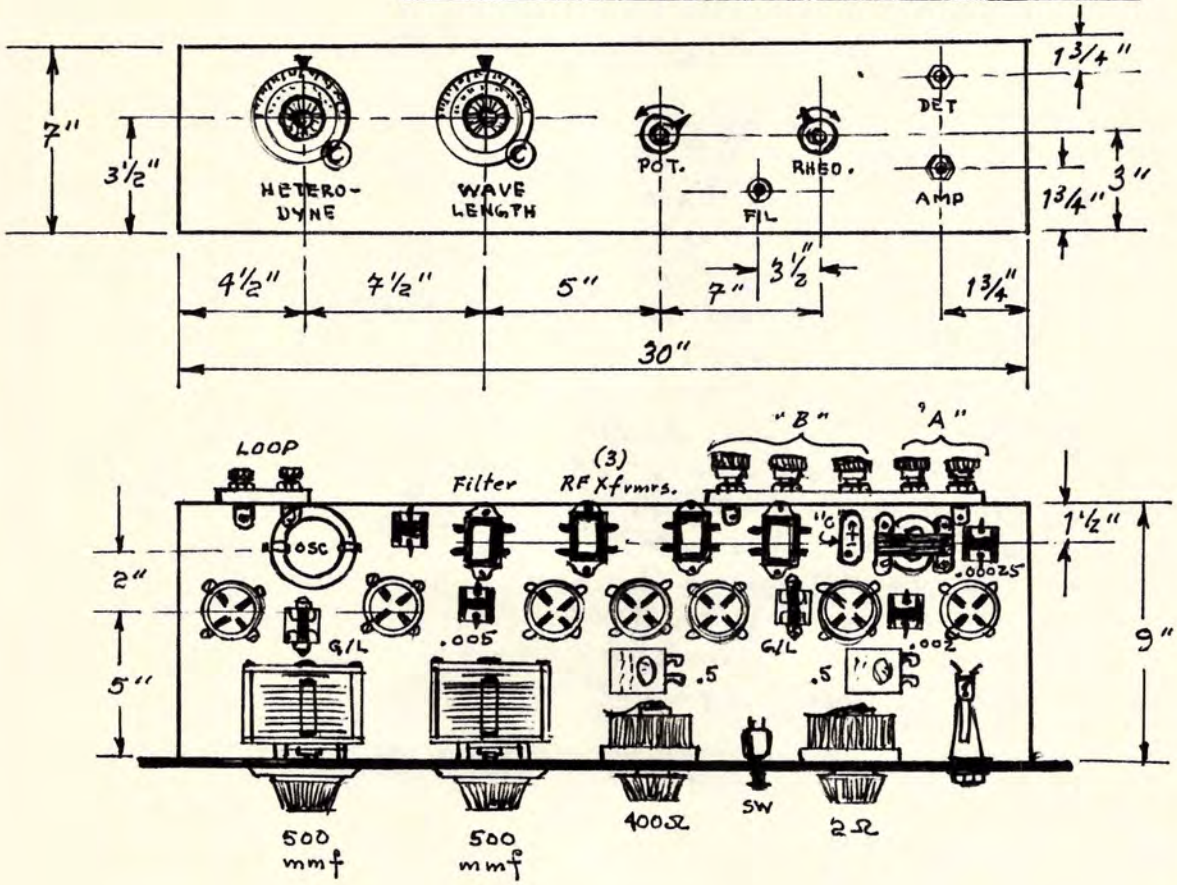

Major Parts List:

Benjamin 500 mmf Variables (2).
Benjamin Type-A Sockets (7).
Mar-Co 4" Vernier Dials.
Karas AF Transformer.
Daven "Leakdensers" (2).
General Radio Pots. & Rheostats.
Binding Posts (7).
"Qualitone" Super Kit (Filter & RF Xfrmrs.).

Panel = 7" x 30" (Formica).
Baseboard = 9" x 29" x 1/2" (Wood).

Loop = Ajax, Aero, Volumax, Lincoln, etc.
01A Tubes (7).

Original Cost of Parts: $82.20.

RADIO DIGEST's SUPER-HET, 1923; Sht. 2

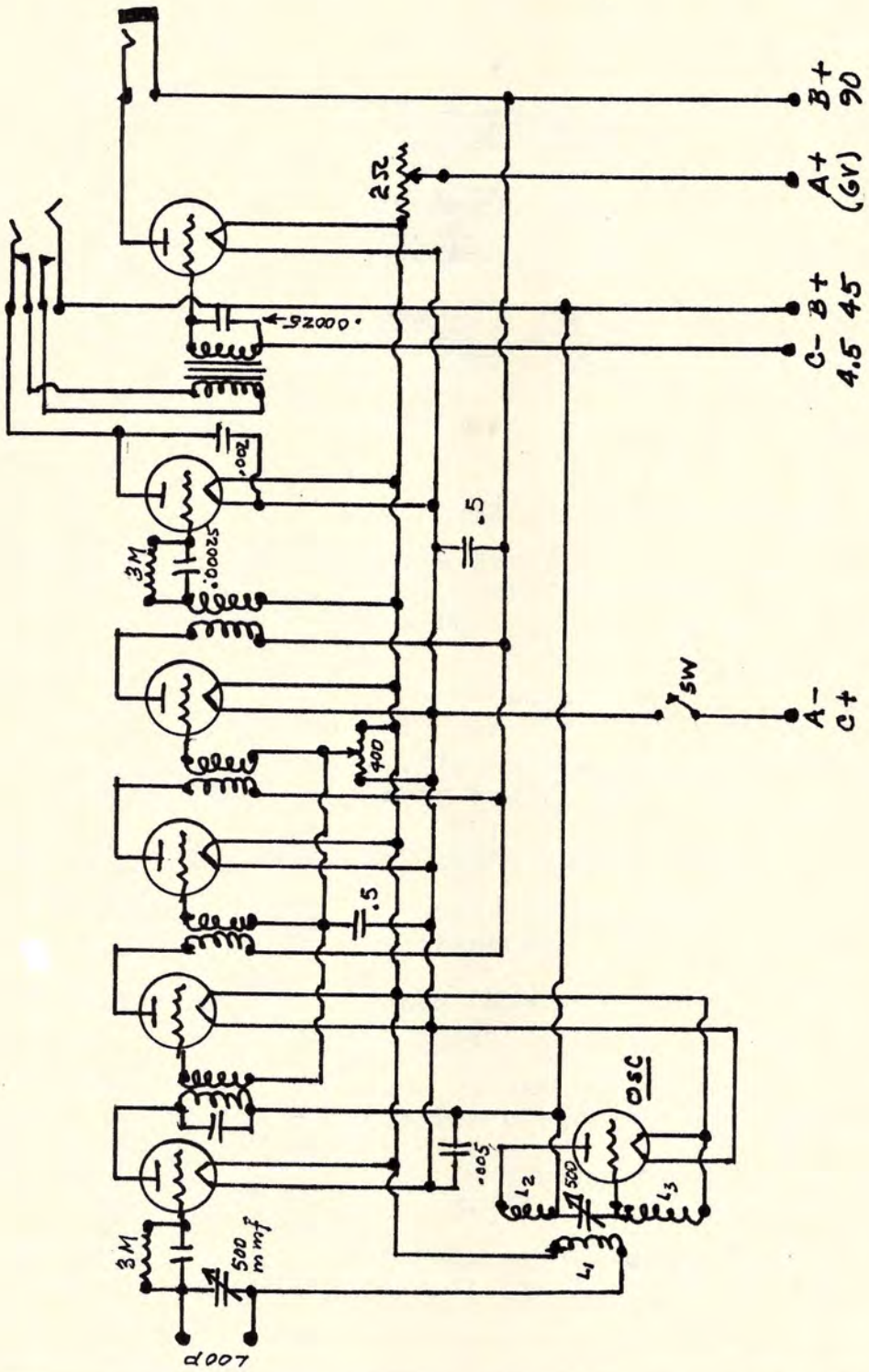

RADIO DIGEST's SUPER-HET, 1923; Sht. 3

If you wish to wind your own coils:

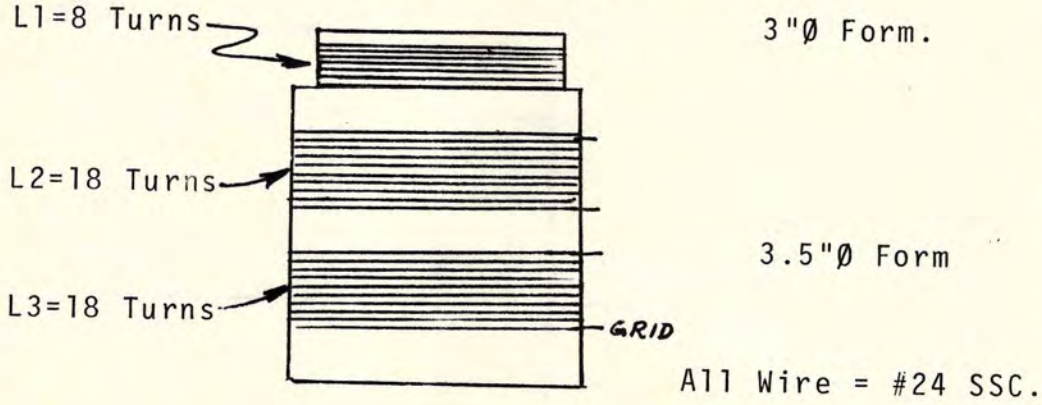

Filter & Amplifier Coils:

The "Qualitone" kit was a kit of conventional transformers of the time, similar to Duratran, Acme, Rauland, etc., which may be substituted.

TUNING:

1. Place HETERODYNE (Loop) variable at 50°. Loop variable tunes rather broadly, which was sommon.
2. If no signal is heard, move dial 20° to the right.
3. Revolve WAVE-LENGTH (Oscillator) dial and listen for whistles or signals.
4. If signals are heard, adjust potentiometer for maximum signal strength.
5. If whistles are heard, turn pot. to the left and rock OSC variable until whistles cease.
6. Place loop variable at 70° and move OSC dial through its full scale.
7. Signals should be heard; is not, place OSC dial at 30° and start again, etc., etc.

REMLER 45KC SUPER-KET, 1925; Sht. 1

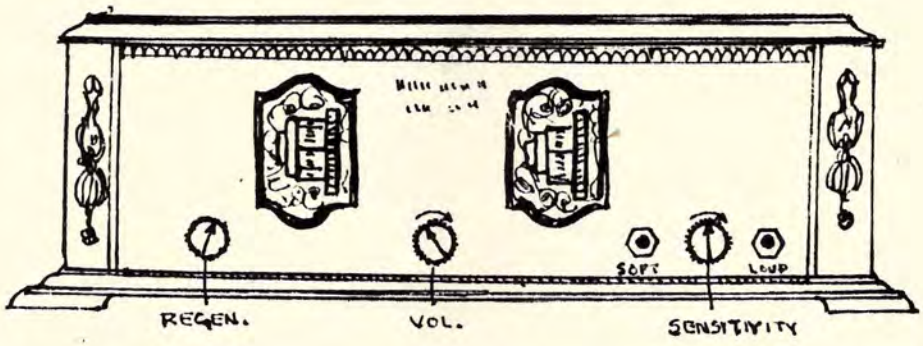

The REMLER 45KC super-het superceded the BEST 115KC receiver, and, over-all, was a more efficient set, despite their obvious similarity.

There were several versions of the REMLER 45KC, and you will find them detailed in the following pages. Aside from the REMLER items, you will note that Danielson & Grey kept changing other components. All were good quality, so you couldn't go wrong with any of them.

Connexions for loop operation and the need of two C-batteries were dropt by the 1927 versions, and a choice was offered of push-pull or impedance-coupled AF. For a general parts list of all versions, see the 1927 version pages. The baseboard layout and the cabinet requirements remained the same for all versions, and made a handsome set.

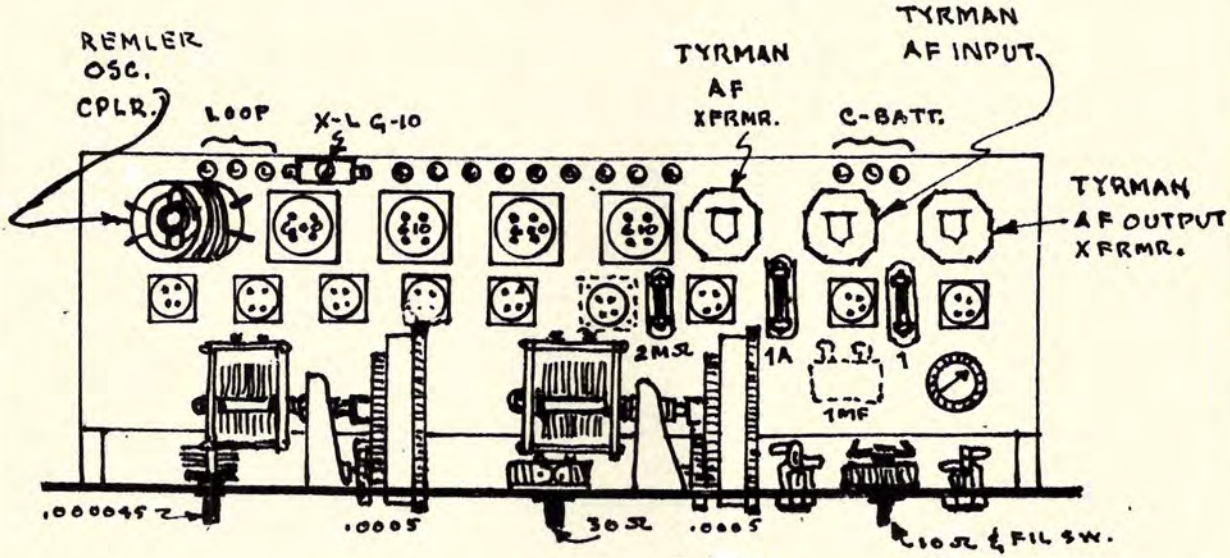

NOTES

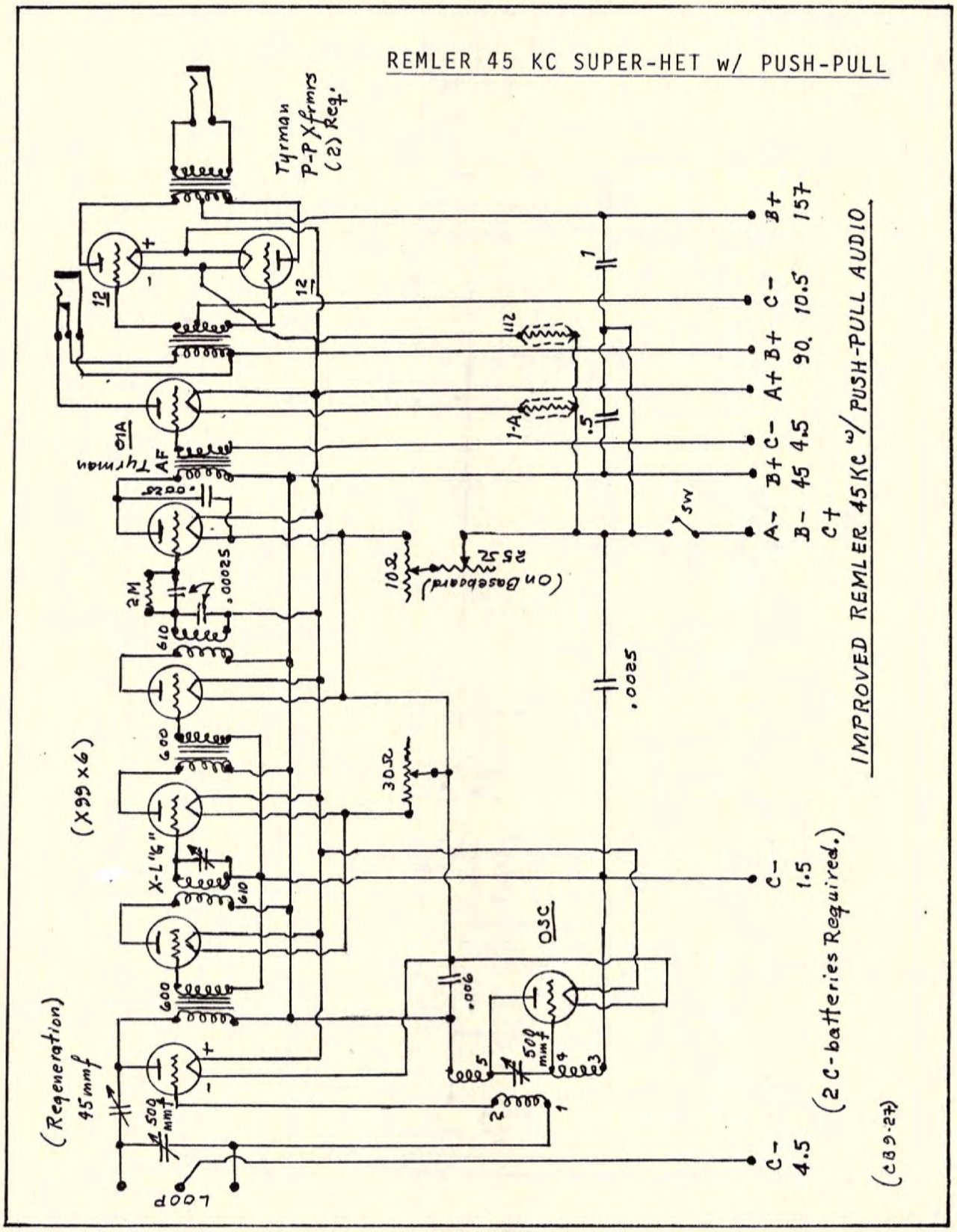
REMLER 45 KC SUPER-HET w/ PUSH-PULL
Tyrman P-P Xfrmrs (2) Req.
Tyrman
V10
AF
(X99 x6)
X-L "G"
(Regeneration) 45 mmf
LOOP
OSC
(On Baseboard)
IMPROVED REMLER 45 KC w/ PUSH-PULL AUDIO
(2 C-batteries Required.)
(CB9-27)

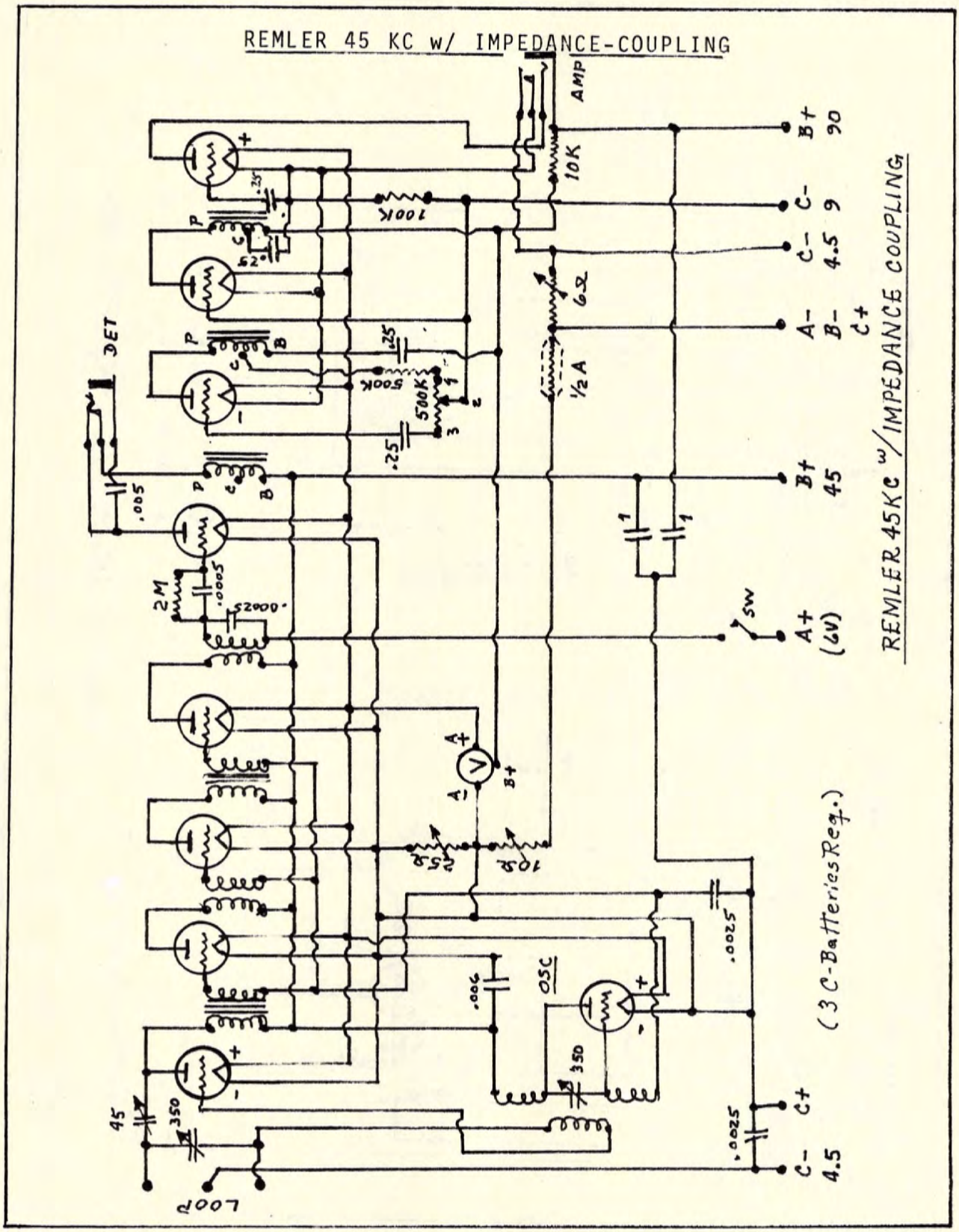
REMLER 45 KC w/ IMPEDANCE-COUPLING
REMLER 45KC w/ IMPEDANCE COUPLING
(3 C-Batteries Req.)
AMP
10K
100K
500K
500K
.25
.25
.25
.25
.005
2M
.0005
.00025
.006
.0025
.0025
.0025
OSC
350
350
45
LOOP
DET
½ A
6Ω
25Ω
10Ω
SW
A+
(6V)
B+
45
C-
4.5
C+
A-
B-
C-
4.5
C-
9
B+
90

REMLER 45 KC SUPER-HET NOTATION

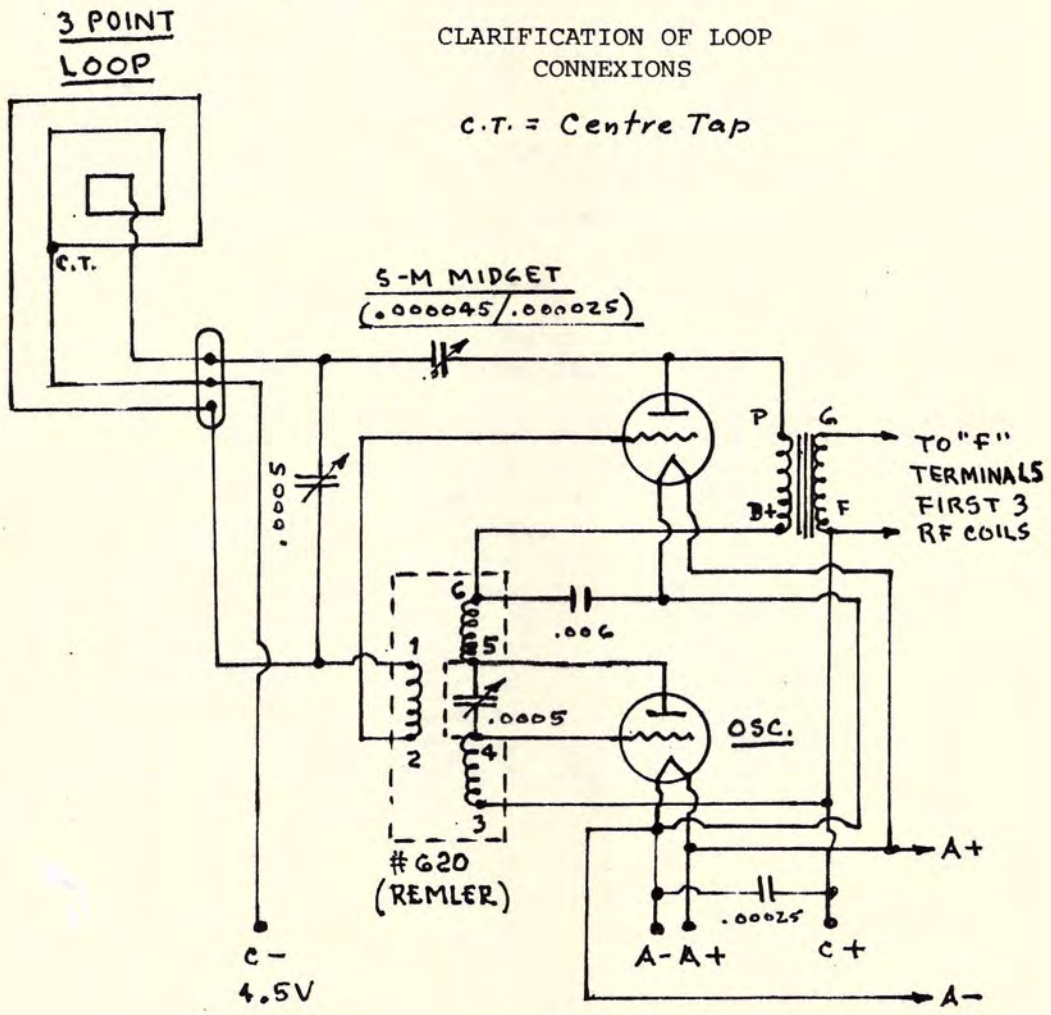

OPERATING INSTRUCTIONS FOR THE 45 KC. SUPER-HET

Preliminary Tests:

Checking out the wiring of the REMLER 45 KC. set is done in the conventional way of turning on the FIL switch, after making sure power is off all other cables, and touching the A+ and A- wires where they connect to each socket in turn. Tubes should light. Remove the FIL cables, and touch all B+ cables, one at a time, to their respective posts. Tubes should not light. If they do, there is a short somewhere in the wiring, and must be corrected before proceeding. If tube does not light, turn power switch OFF and connect all battery cables. Connect the C+, A-, B- leads together at the battery post.

Adjustment & Operation:

1. Connect a 3-point Loop to the loop posts.
2. Advance rheostat until meter reads 3V.
3. Set Midget Variable to full mesh position.
4. Operate both dials together.
5. Turn VOL all the way up for background noise.
6. When a signal is heard, decrease VOL.
7. Retard SENSITIVITY control for local reception.
8. For maximum sensitivity and fidelity, VOL control should be turned CW to just below point of oscillation.
9. The REGENERATION control and "Variodenser" should be tweeked for best over-all reception. If a signal is heard at two points on the dials, it means that these controls have not been set properly.
10. DO NOT ATTEMPT TO DRIVE THE 99 TUBES BEYOND 3V! In fact, a steady voltage of 2.9V would be most feasible.

* * *
* *

AN IMPROVED REMLER 45KC SUPER-HET, 1927;Sht.1

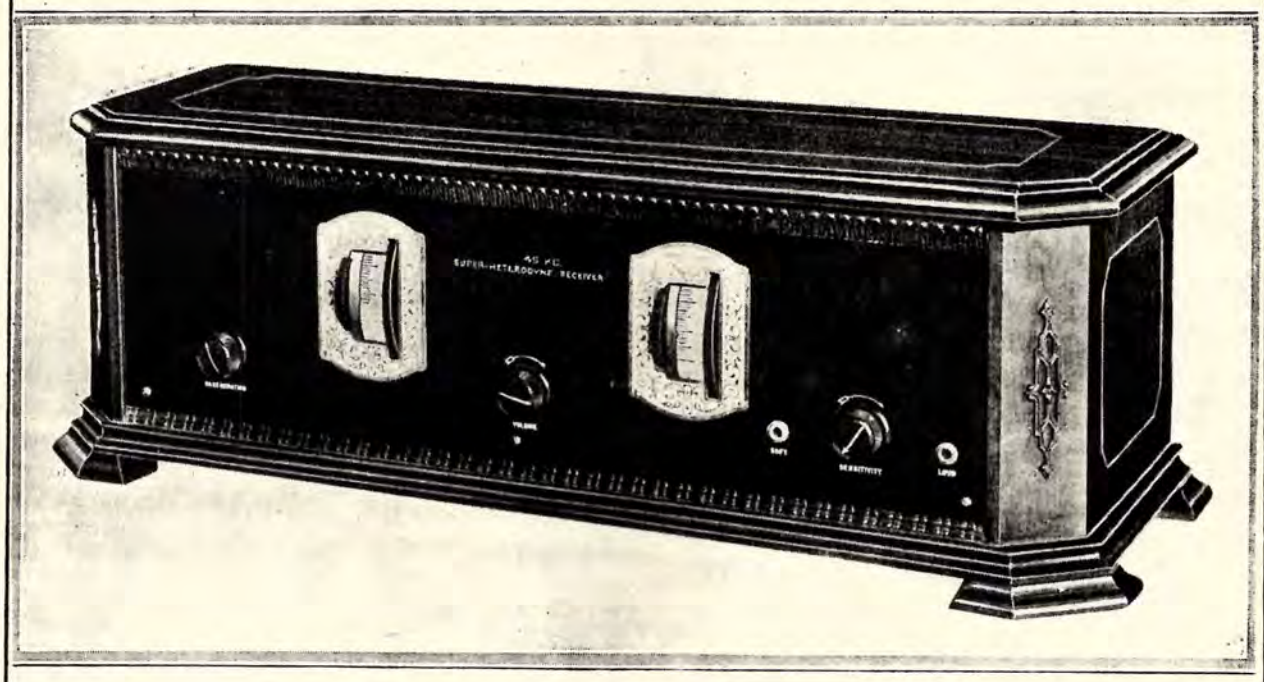

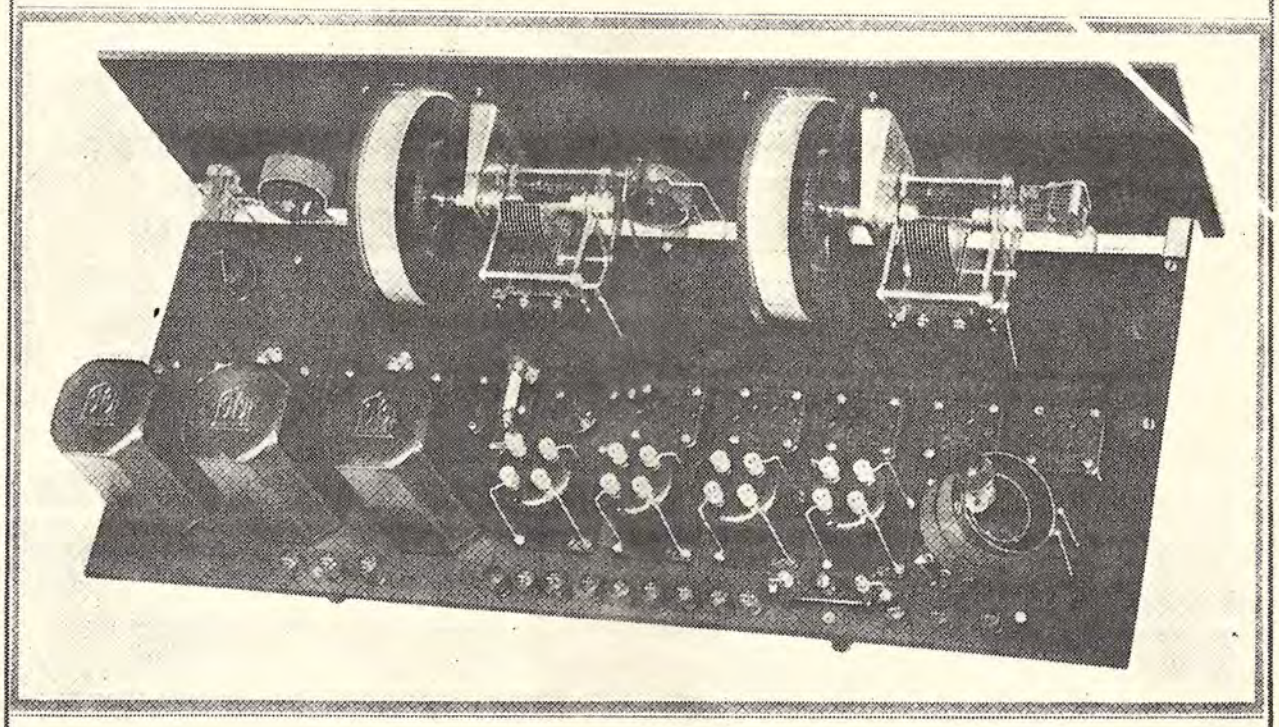

AN IMPROVED REMLER 45KC SUPER-HET, 1927; Sht. 2

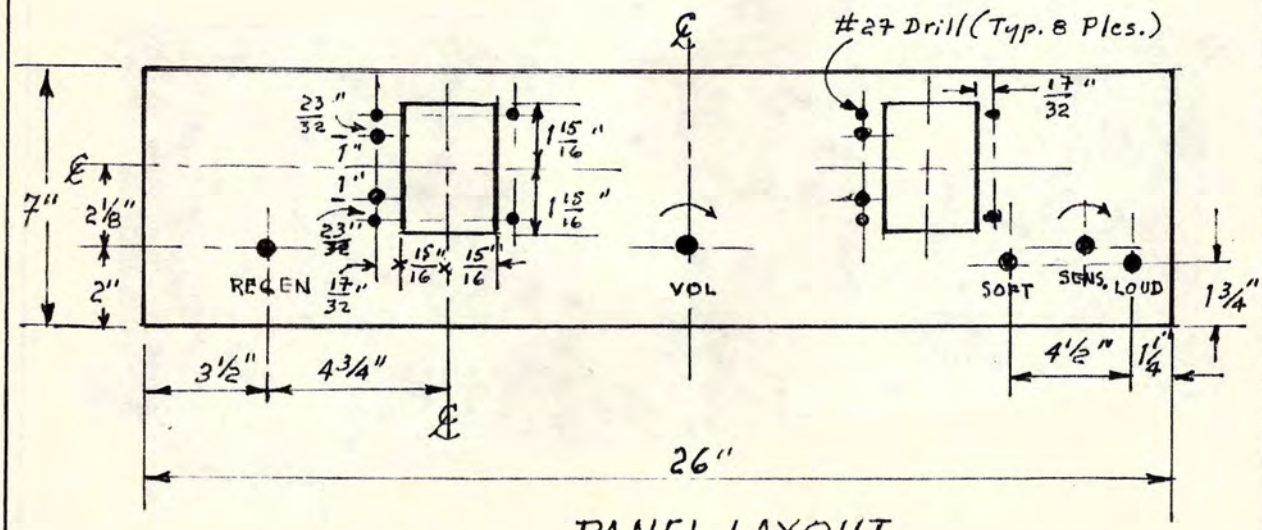

PANEL LAYOUT

Controls Holes 3/8"ϕ.
Jacks Holes 11/32"ϕ.

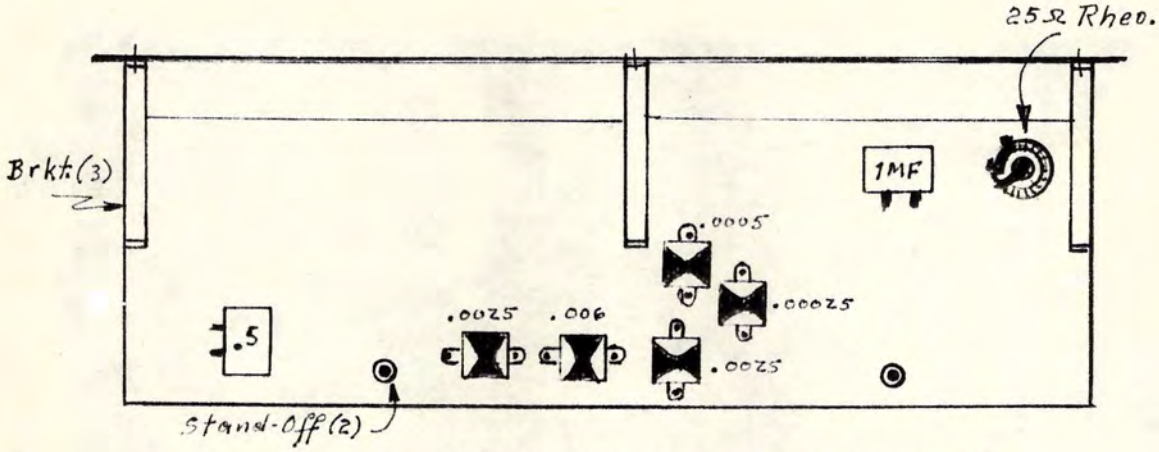

UNDER CHASSIS COMPONENTS

(CB 9-27)

IMPROVED REMLER 45 KC SUPER-HET, 1927; Sht. 3

General Parts List:

Remler 600 Transformers (2).
Remler 610 Transformers (2).
Camfield 500 mmf Variables (2).
Camfield 620 OSC Coupler.
Tyrman AF Transformer.
Tyrman Push-Pull Transformers (2).
Tyrman Drum Dials (2).
S-M 25 mmf Midget Variable.
X-L "Variodenser", Model G-10.

Frost Sub-Panel Sockets 531 (8).
Frost Jacks 234 & 235.
Frost Rheostats 10;25;30-ohms.

Karas Sub-Panel Brackets (3).
Benjamin Socket.
Amperites 1-A & 112.

Fixed Condensers: .006 - .00025(2); .0025(2); .5; 1MF.
2-Megohm Grid-Leak.

X99 Tubes (6).
01A Tube.
12A Tubes (2).

20-Feet Acme "Celesite" Wire.

Reasonable substitutions may be made with satisfactory results, except for the REMLER 600 series transformers.

* * *

Robertson Davis Automatic Super-Six Receiver

The Robertson-Davis Company of Chicago was the first manufacturer to offer "automatic tuning", instead of simply rotating a drum dial. It was a series of push-buttons mounted on the panel, and operated like the push-buttons on your automobile radio today, except that the station selection was done electrically and not mechanically.

The original offering to the home-constructor was the respectable "Melo-Heald Eleven/Fourteen". Both are detailed hereinafter. The "Super Six" was a super-het with an IF of 465, which was unusual enough in 1928. Both tubes and transformers plugged into a double row of sockets on the sub-panel. It was a true "one spot" receiver, like the "Melo-Heald".

No soldering was required to assembly the set, only a screw-driver and 18 minutes of your time! The B-current consumption was 18 mA, and it was impossible to drive the circuit into oscillation. Oscillator and antenna coils were of the plug-in variety, covering a wave-band from 20 to 555 meters.

The electric automatic tuner was plugged into the set, and any pre-selected six stations could be "programmed". The technique was to tune in a desired station with the drum-dial and then transferring the station to the automatic tuner by means of a simple adjustment. The notion of automatic tuning fascinated radio engneers for a long time, and even Scott produced an elabourate remote control device, operated through long leads to the set, in 1929.

The audio sexion permitted use of the 71A or 50 tube, and provision was made for attaching a phonograph, using only the audio sexion of the receiver. When next you pick-up your remote control of your idiot-tube, remember that its genesis began with Robertson-Davis, and their early experiments with automatic tuning.

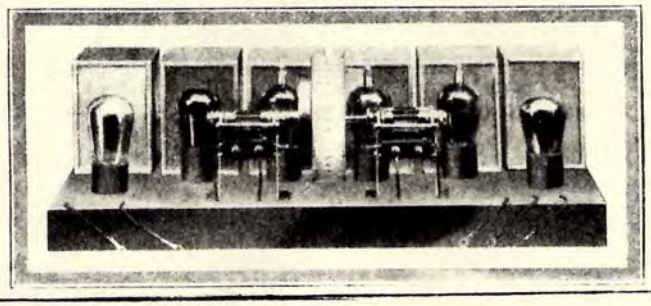

ROBERTSON-DAVIS "AUTOMATIC SUPER-SIX"; Sht. 2

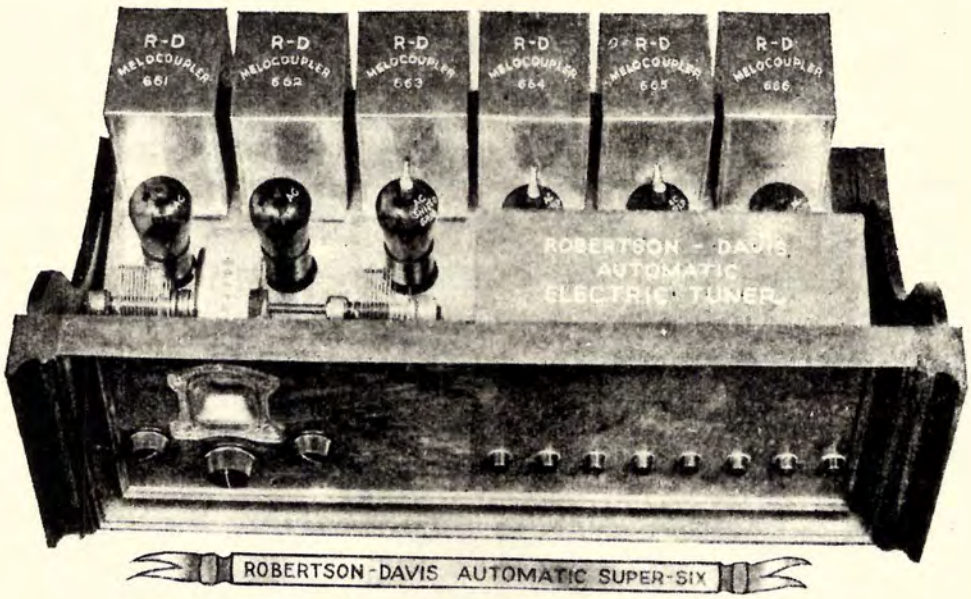

The cut on the preceding page shows the first Robertson-Davis "Super-Six"; the cut above is of the "Automatic Super-Six". The original R-D Six evolved naturally from the "Melo-Heald" of deserved fame. The Automatic Super-Six, however, proved to be a bit too sophisticated for the average home-constructor of the time, and the basic patents covering it were disposed of.

The use of plug-in ANT and OSC coils was used by several super-het manufacturers, permitting the listener to reach beyond the standard BC bands for short-waves.

ROBERTSON-DAVIS "AUTOMATIC SUPER-SIX"; Sht. 3

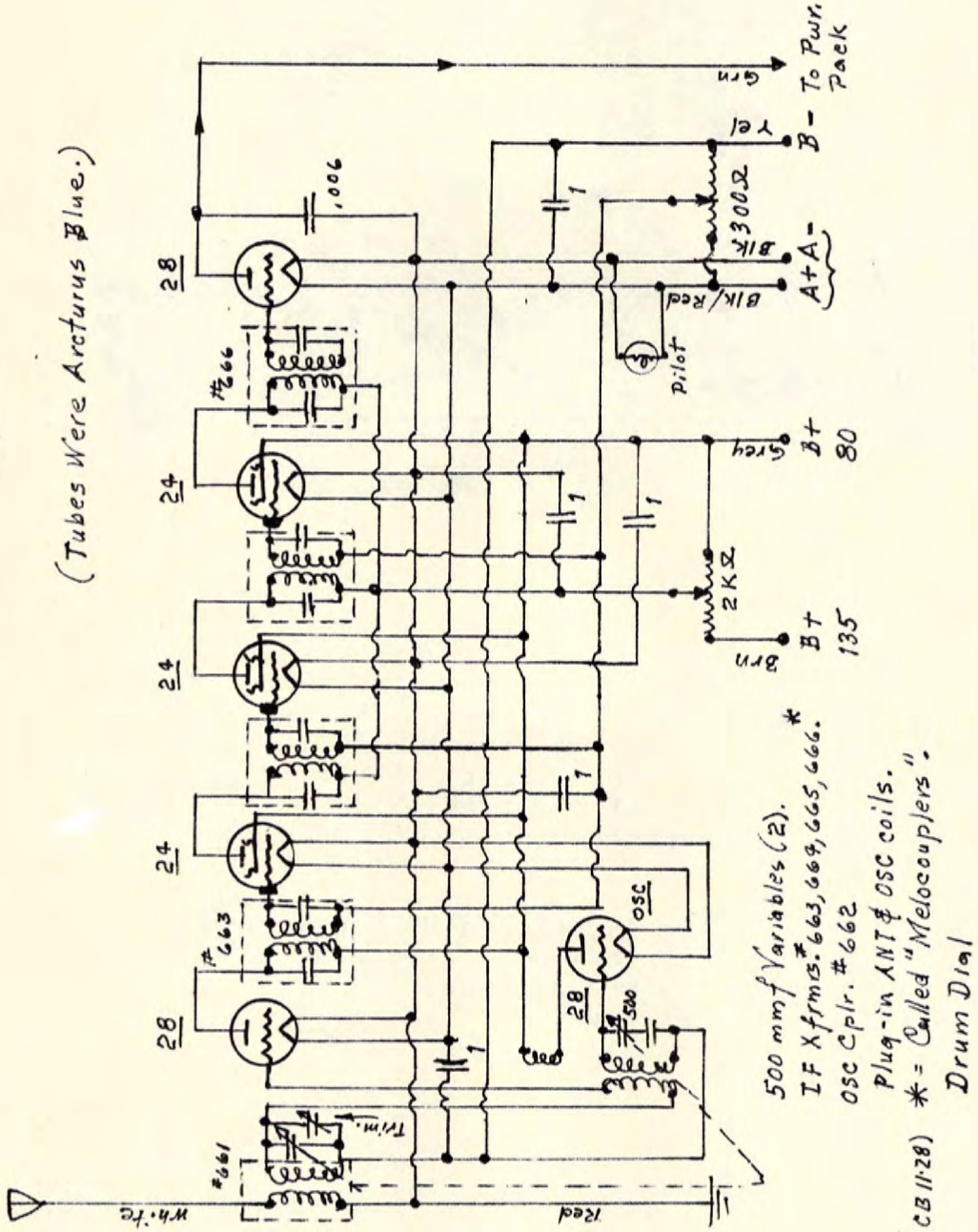

ROBERTSON-DAVIS "AUTOMATIC SUPER-SIX" POWER SUPPLY

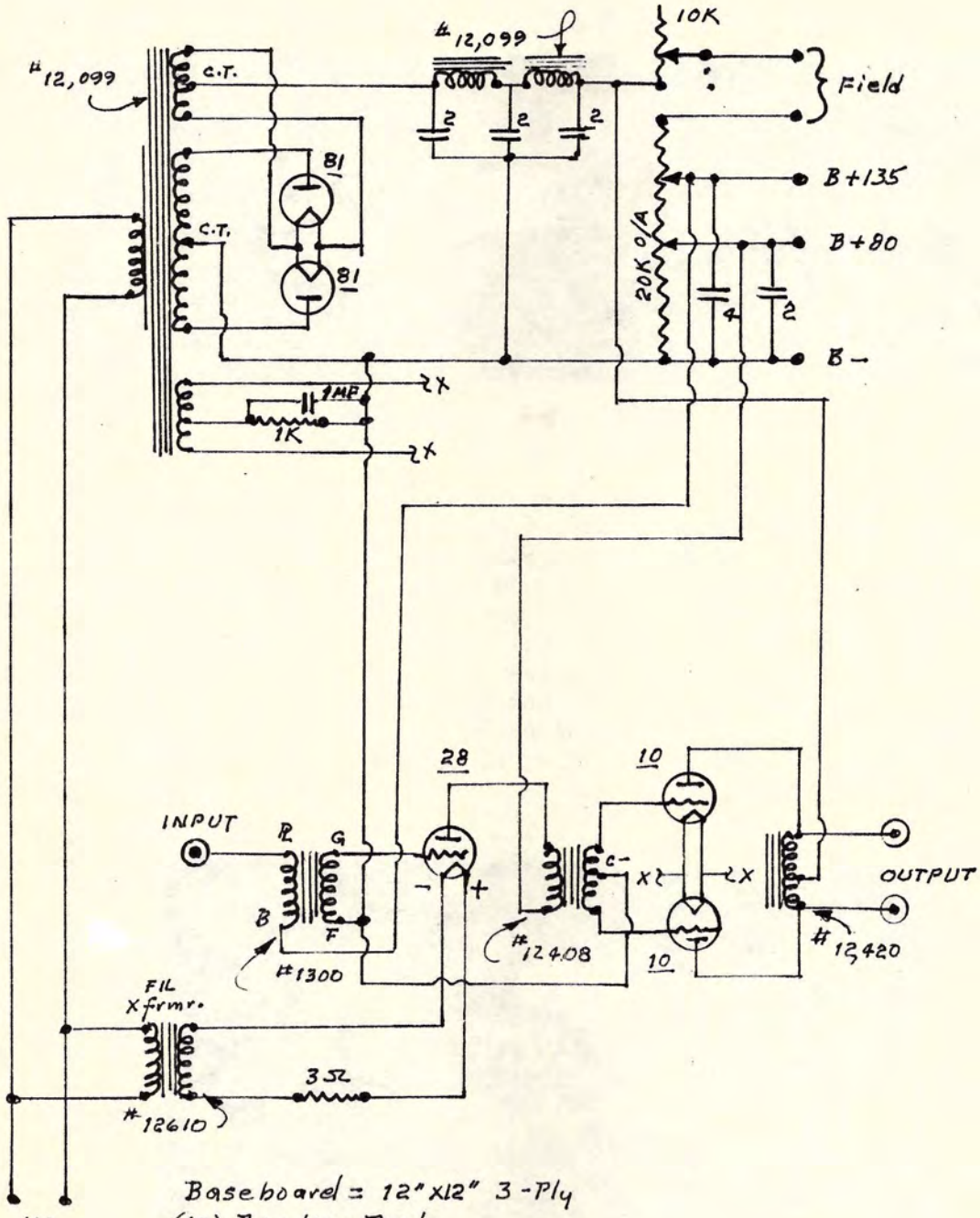

Baseboard = 12"x12" 3-Ply
(10) Binding Posts,
R-D Part Nos. Shown.
(5) Benjamin Sockets.

SAMSON IMPEDANCE-COUPLED I.F. SUPER-HET, 1927:Sht.1

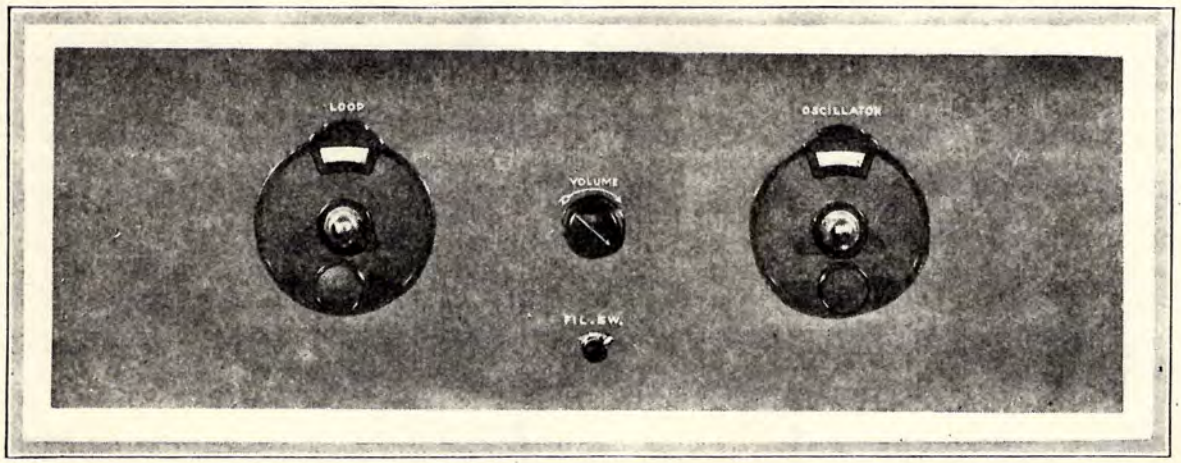

There were, during the rise of the super-het in the Twenties, as has been mentioned, many an odd, freakish, and sometimes fraudulent circuit offered the home-constructor as something completely new and novel and superior to all others. Among the odd but quite legitimate circuits was the one from SAMSON, in which the I.F. stages were impedance coupled, and for which they made special transformers. Those transformers are not usually found at swap-meets, but it is an extremely interesting circuit, and you should look for the parts. The No. 67 variable condensers called for were the early SAMSON variables with a "roof" over the plates, and they do turn up, as well as the fine SAMSON coils, usually in N.O.S. condition.

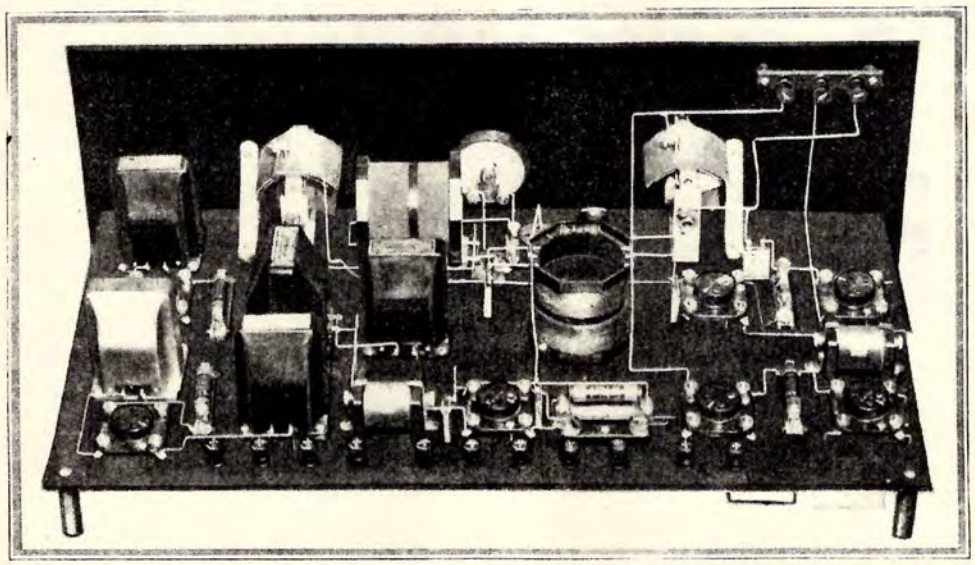

SAMSON IMPEDANCE-COUPLED I.F. SUPER-HET, 1927; Sht. 2

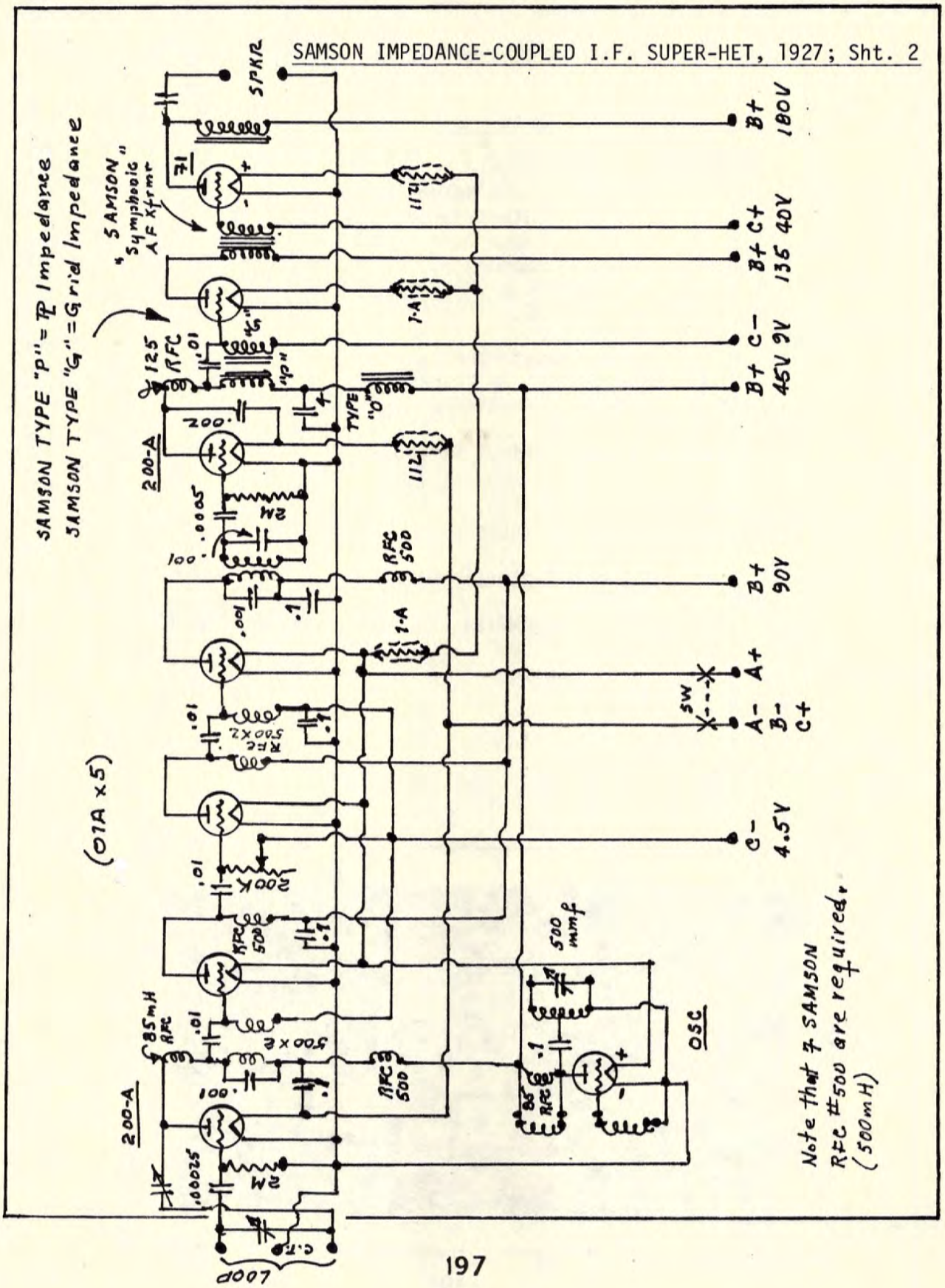

SAMSON IMPEDANCE-COUPLED I.F. SUPER-HET, 1927; Sht. 3

General Parts List

SAMSON Type 67 Variable Condensers (2).
Type 31 Double Rotor Coupler.
Type "O" Output Impedance (2).
Type "P" Plate Impedance.
"G" Grid Impedance.
No. 500 RFC (7) - Note; 500 mH each.
No. 125 RFC.
No. 85 RFC.
Tuned Transformer.
"Symphonic" AF Transformers.
SAMSON Universal Vernier Dials (2).

Hammarlund 50mmf Midget Variable.
Eby Engraved Binding Posts (14)
Amperites: 1, 1-A, 112.
Benjamin No. 1040 Sockets (8).

200K Rheostat or Potentiometer.
2M-ohm Grid-Leak.
Fixed Condensers: 4MF(2); 2MF(2); .1 (7); .001 (2); .002; .0005 (2).
Double Circuit Switch.
Speaker Tip Jacks.

80' Copper Wire, Tinned.

Panel = Formica 8" x 24" x 3/16".
Sub-Panel = Formica 12" x 23" x 3/16".

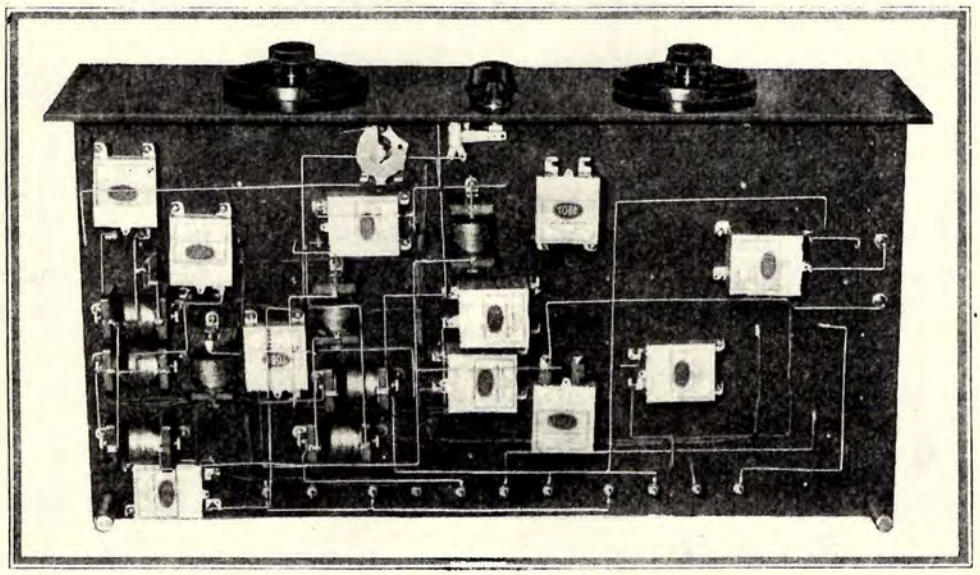

SCOTT AC-10 SUPER-HET, 1928; Sht. 1

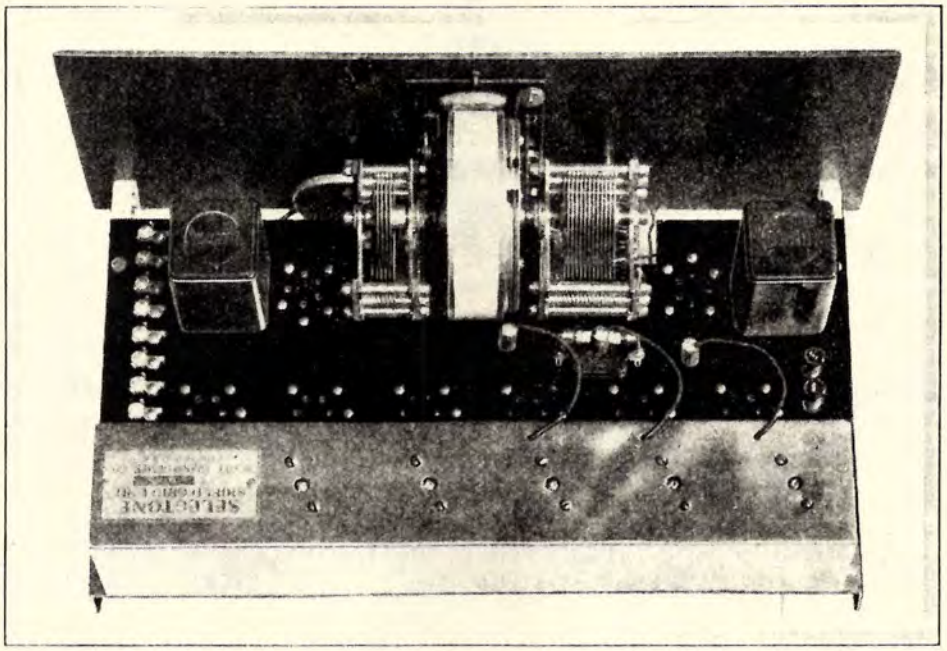

E.H.Scott was the most vociferous and adamant of all custom-set manufacturers in his oft-stated belief that nothing was being offered the radio public that could compare with a truly custom-built, preferably ordered from Scott. His irregular Newsletter, correspondence, ad-copy - all iterated and re-iterated the sacredness of custom-built sets, which reached its zenith during his on-going feud with McMurdo Silver.

In consequence, in the Autumn of 1928, the radio world was a bit startled to learn that Scott was going to produce radios complete, and offer them to selected "drummers" around the country, who would be working directly with the factory. (Scott, incidentally, would have objected loudly to having his works referred to as a factory - he would insist that his was a "laboratory".)

The startling announcement was followed by the production of the Scott AC-10 Super-Het. It was compact, rugged, dependable, and a "pitch" was made to the loosely-knit fraternal group known as the "Custom-Set Builders Guild". The set would not be offered parts houses, radio shops, mail-order houses, etc.

Simplicity of operation was obviously a design criterion, and

SCOTT AC-10 SUPER-HET, 1928; Sht. 2

equally as obvious was the fact that it was acheived. A seperate power-pack, also designed by Scott and pre-assembled, was required.

The original Scott AC-10 came factory-wired, of course, but its data are included here as a challenge to you. Like all super-hets of the Twenties, the significance of Scott's circuit lay in his RF, IF, and OSC coils - called transformers. The "Selectone" units were typically Scott - high quality, well-made, top-drawer. Why not have a go at trying to duplicate the circuit? - which is straight-forward enough. It really isn't that difficult, and as has been stated, the fun of Radio really is in doing it yourself.

Start looking for the "Selectone" units at flea-circuses or junk-shops called "Antique Bazaars". They rarely turn up, frankly, but that merely adds to the sense of adventure of the search. Once you have those units, all other parts called for could be by anyof the manufacturers of the period - the better ones.

While I have prepared a seperate Monograph on all of the early Scott receivers up to the time of his "All-Wave" chrome plated jobbies, the Scott AC-10 fits easily into the families of super-hets referenced in this particular Monograph.

* * *
* *
*

SCOTT AC-10 SUPER-HET, 1928; Sht. 3

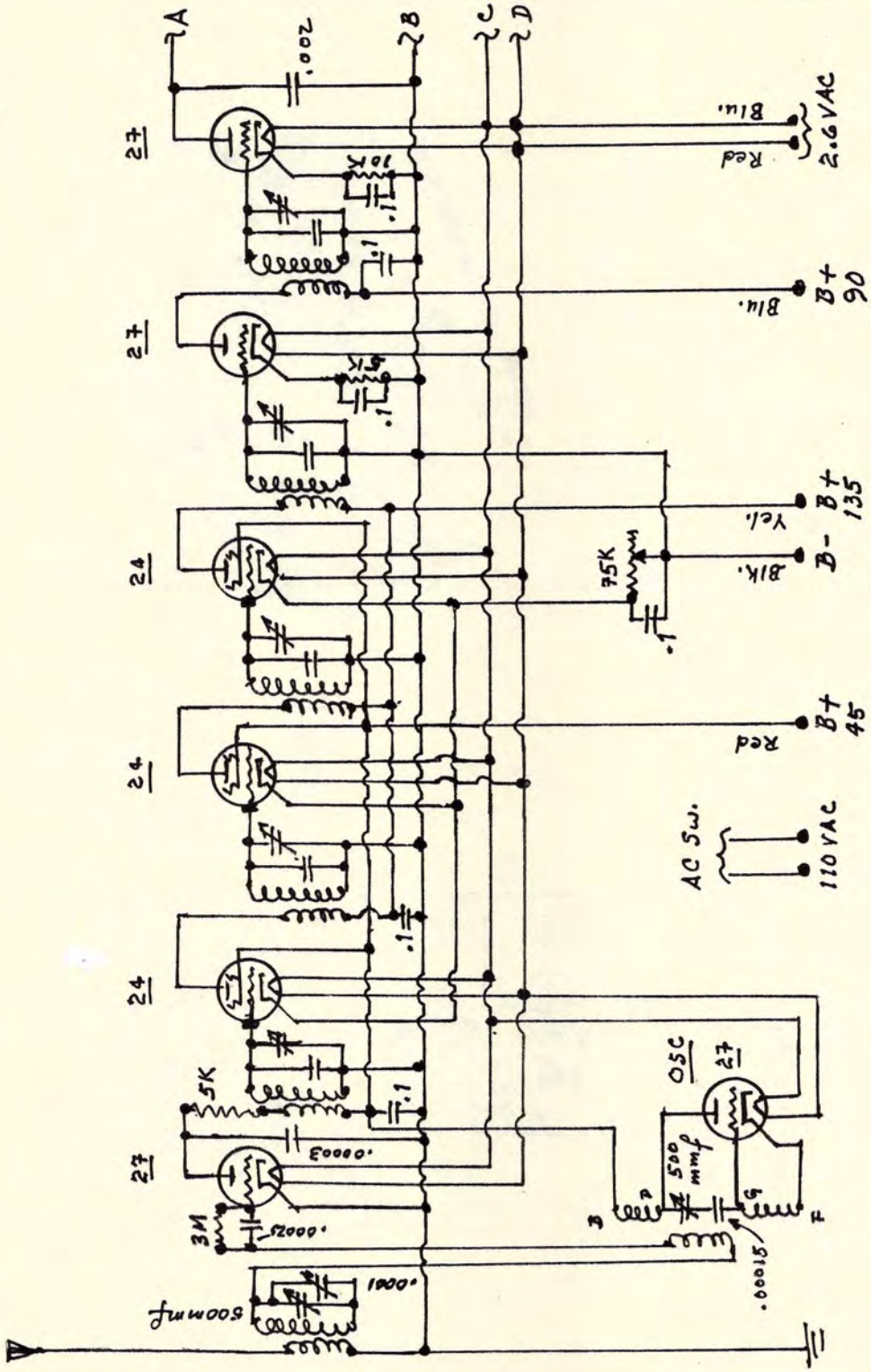

SCOTT AUTOMOBILE SUPER-HET, 1929

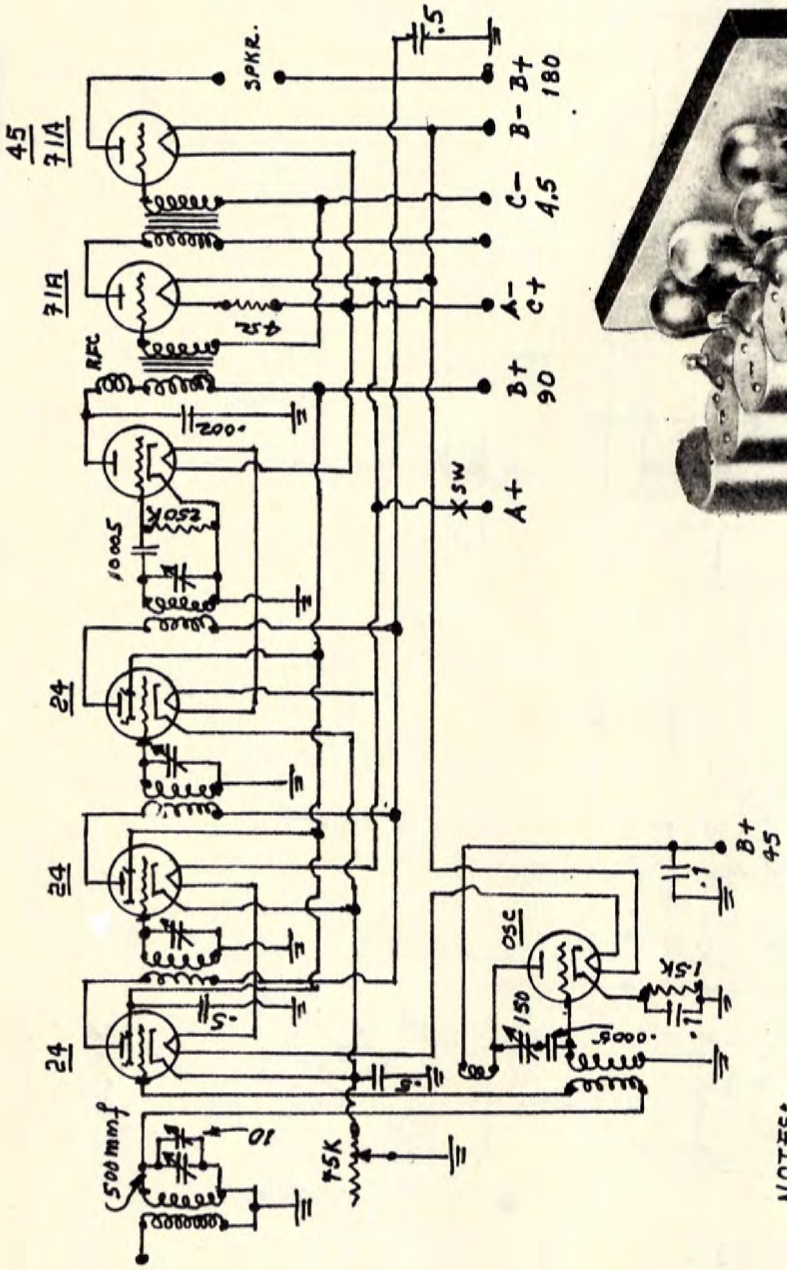

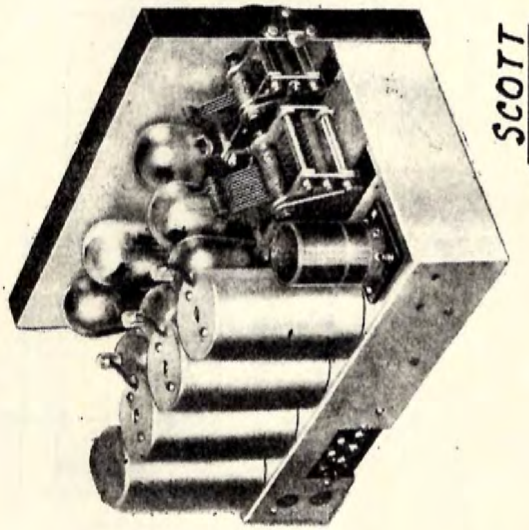

NOTES:

1. Grid return through car frame.
2. Total "A" current = 3.5A.
3. "B" Current = 25 mA.
4. Allen-Bradley Spark-Plug Resistors.
5. By-pass on Generator & (+) of Coil.
6. UTAH Magnetic Speaker.
7. ANT was a copper screen atop car.
8. Seperate "B" batteries required.

(13-1-30)

THE NON-UBIQUITOUS ST. JAMES RECEIVERS

As would have been expected, there in the dawning days of Radio, there were manufacturers who offered all things to all men. If distance reception (DX) or selectivity were in vogue, or higher audio output power, claims were immediately made in all media by some manufacturers offering whatever was being touted. It was ever thus, and the old Latin warning was and is applicable: *CAVEAT EMPTOR!*

Some fictitional claims were phrased in rather erudite language by which some less educated readers were intimidated as such copy made them momentarily aware of their lack. Some manufacturers, and they were becoming the majority, knew the quality of their products, and simply offered them behind their names. There were a few advances in some of the far-out offerings, however, and if invalidation occurred at some future date due to advances in the state-of-the-art, that too was part of the game. One such contributor was St. James.

St. James had been an electrical and later radio engineer for the U.S.Navy during the Kaiser's War, and later he set-up a school for teaching the fundamentals of Radio. He eventually designed a circuit that was offered in two versions, called the *Twin Four* and the *Upright Eight*. The distinction lay solely in the physical appearance of each. Claims by St. James, in his own words:

"The receiver must be immune to signals excepting through the proper selection of channel, the loop, or coil collector. SHIELDING ACCOMPLISHES NO ADVANTAGE, and the St. James Labs have developed a new and effective way to make use of the "U" circuit. If we consider that the wiring and exposed devices in a set as being capable of picking up a portion of all electrical energy and disturbances which set up a field, it becomes apparent that such is detrimental to the receiver. A column of water in a pipe has a certain pressure existing throughout its height, but we can balance out the pressure by bending the pipe in the form of a "U". The water is now at rest and may not be affected by external pressures. Our receiver likewise is so constructed, the wiring forming a "U" by turning back upon itself so that one half of the energy opposes the other half, thus balancing out energy that might be impressed on the wiring. The advantages from this system are obvious....."

THE NON-UBIQUITOUS ST. JAMES RECEIVERS;Sht.2

The argument was specious, of course, but there were quite a few home-constuctors who had a go at the St. James' circuits, and it endured for a year or two - which seems to have been the average life of most kitted radios of the time. The kits sold for $83.40 in 1927, sans loop, speaker, and cabinet. The difference in the St. James units was in his evacuated RF amplifiers, constructed like a vacuum tube and were of the plug-in variety. All other parts were conventional, and as with other manufacturers, adverts for the receivers listed the names of manufacturers whose parts were utilised for the receivers - all were top-drawer.

Dr. Wm. Jelinek of Rhinelander, Wisconsin, was quite taken with a St. James set he picked-up, and he set about restring it from data contained in Volume II-B of these Sketch-Books, with thanks. He was, however, rather distressed that the set did not perform as was anticipated. I then suggested that he construct a better receiver, the Lacault *Ultradyne L-2*, which he subsequently did and was happy.

* * *
* *
*

ST. JAMES "TWIN FOUR" SUPER-HET, 1927

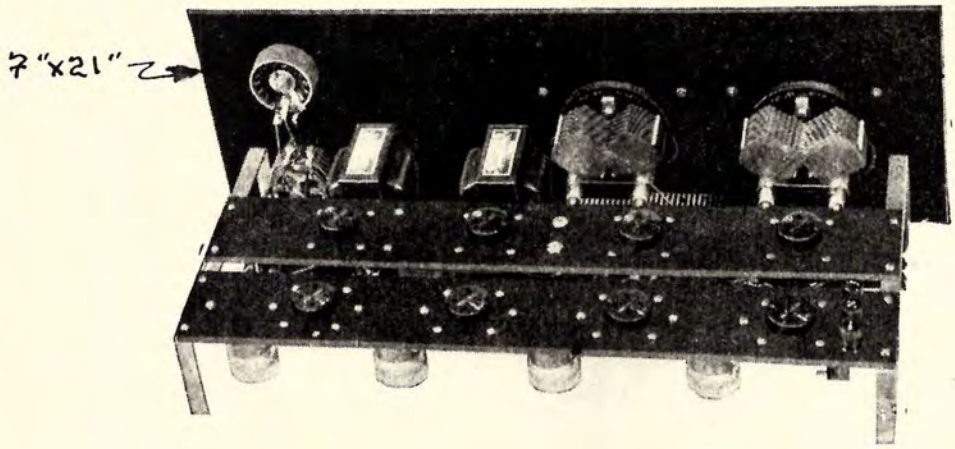

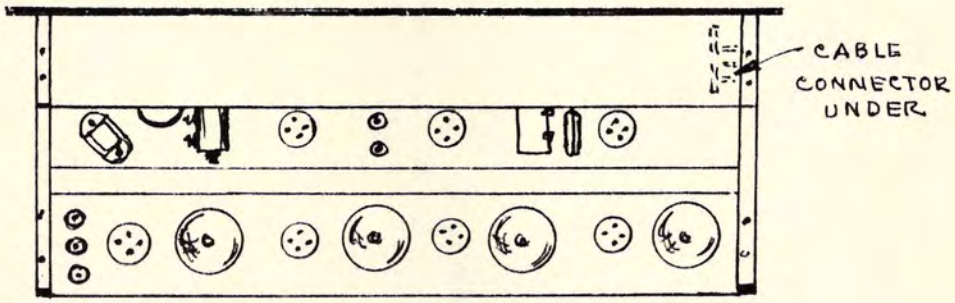

BOTTOM VIEW

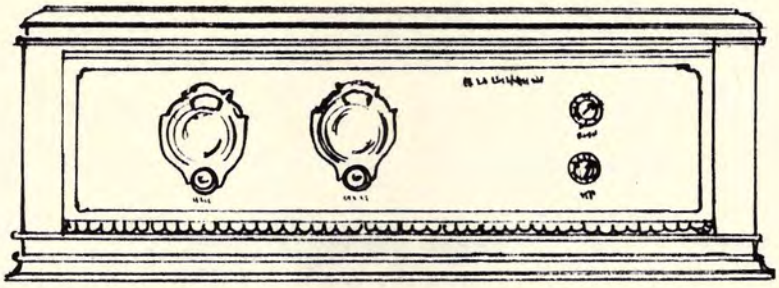

Ehlert Cabinet

REMLER Twin-Rotor Variables.
Kurz-Kasch Dials.
Lignole Panel.
Thordarson R-200 AF Xfrmrs.

ST. JAMES "TWIN FOUR" SUPER-HET, 1927

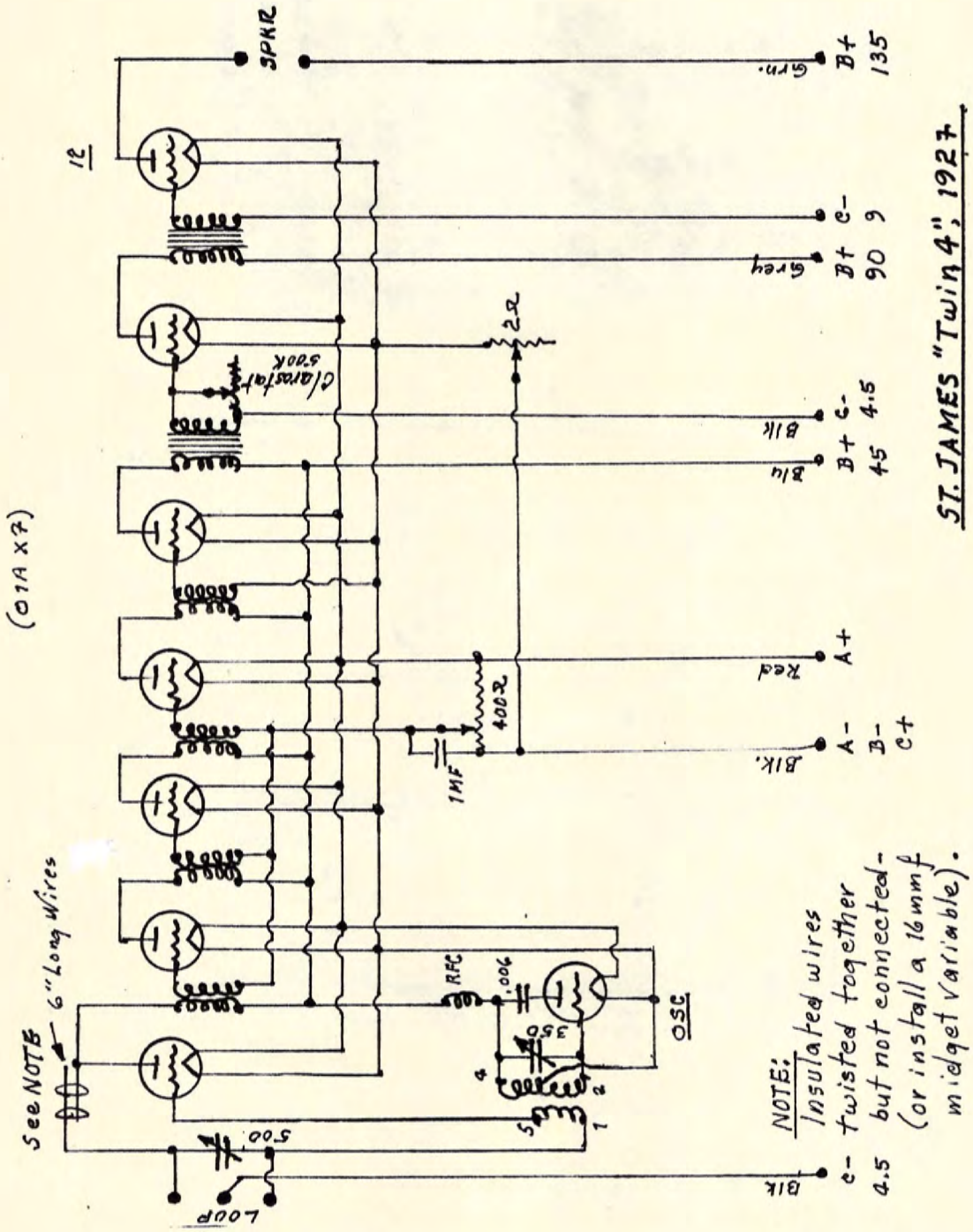

ST. JAMES "UPRIGHT EIGHT", 1927

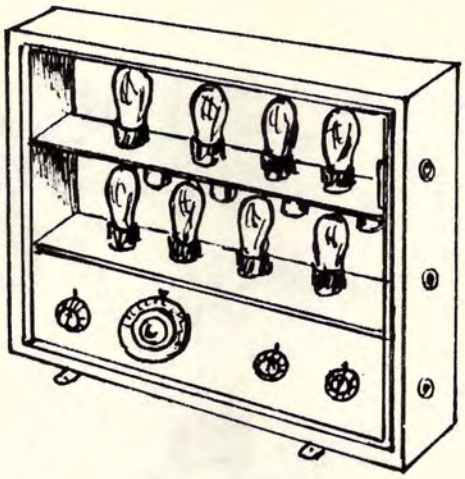

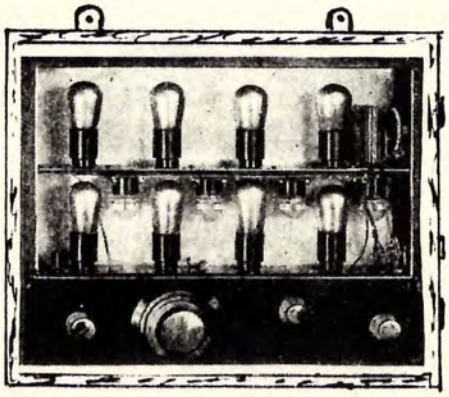

FRONT COVER REMOVED

This receiver is essentially the same as the "Twin Four", the configuration being different for the sake of difference. It was an awkward item to pack about, even though it was advertised as a portable. The chief distinction of St. James was his evacuated RF transformers.

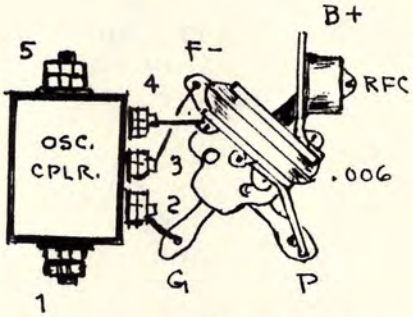

OSC. CPLR. DETAIL
(St. James Special)

ST. JAMES Two Forty

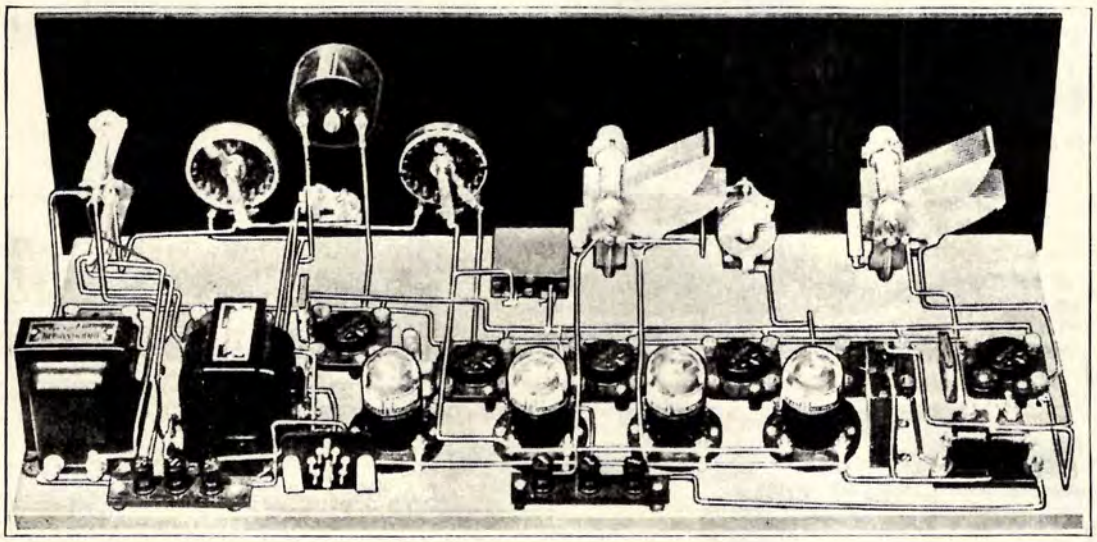

To round out the St. James story, the above cut may be of passing interest. The circuit is identical to the "Upright Eight" and the "Twin Four" offered by St. James, but when entered the market-place, as of 1926, he went in for a more conventional layout, as shown.

The set used standard parts and while it is not likely that you'll ever come by a "240", you might find a set of the evacuated RF transformers. While the art of evacuating glass, bulbs has advanced a bit since then, and some of the early evacuation techniques were imprecise to where the envelopes would leak after awhile, the St. James items seem to endure rather well.

If you do come by a set or a "junker" with them, try constructing any of the St. James' receivers, with most any standard parts you have at hand. It will be a worthwhile exercise, and while the circuit did not permit DX-ing beyond five or six hundred miles, save by freakish atmospherics, the tone-quality was exceptional for the time.

* * *
* *
*

A $35 VALUE FOR $10 - THE PASSING OF ST. JAMES

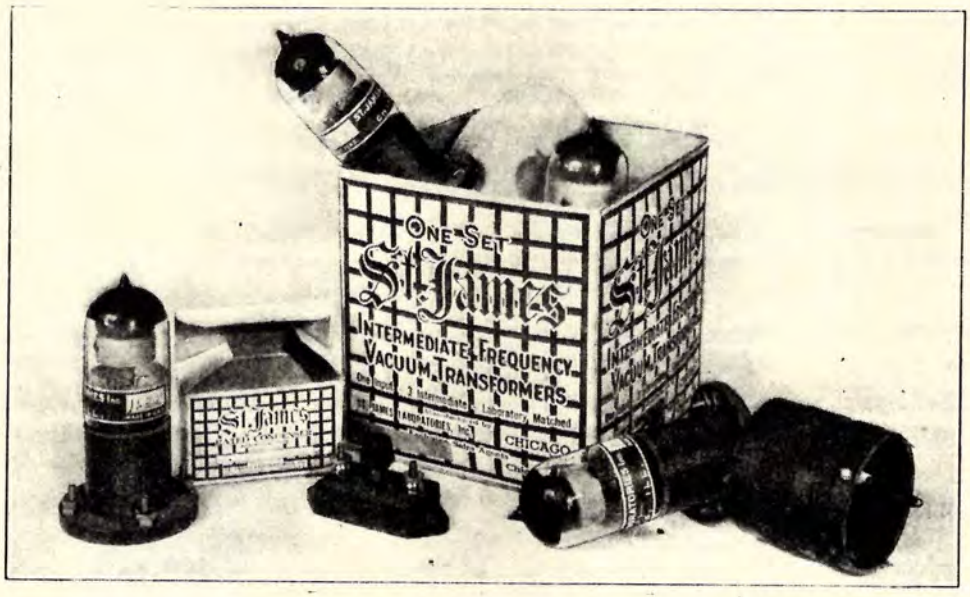

By the beginning of 1928 the St. James circuit had run its course of popularity, and manufacturers of the components moved quickly to dispose of their stock on hand. The illustration above offers a good case in point, not only for a common practice among supplies of sub-contracted goods - and which will always be with us, but because it also demonstrates the fact that any socio-technical phenomenon that is thrust at everyman will always attract opportunists. And when the fad or favour fades, they will immediately dump goods on hand.

The MACK LABS of Chicago were the suppliers for the peculiar and unique IF vacuum St. James transformers. The IF transformers were a bit ahead of their time - not because they represented anything new in IF transformer design, but because St. James was the first radio engineer to evacuate housings of IF coils. Theoretically, it was an advance; in practical terms, the state-of-the-art of other components used in Radio were not compatible with such an advance.

The kind of mark-down shown in the title may be taken as atypical of a very common practice, which probably reached its zenith in the early Thirties, when RCA super-hets originally priced at $285 were being offered new for $17.

* * *

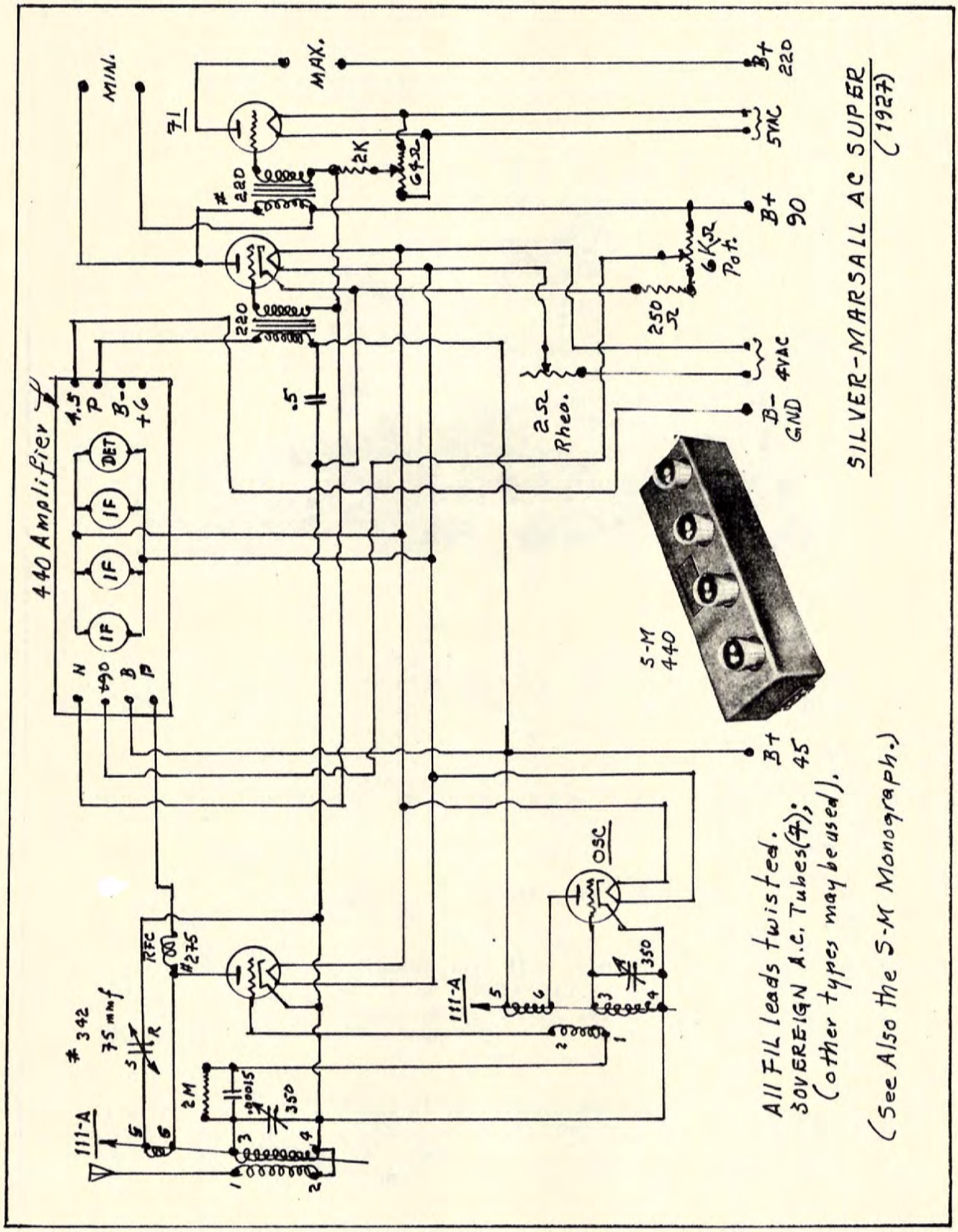
SILVER-MARSALL AC SUPER
(1927)
440 Amplifier
MIN.
MAX.
71
#220
2K
6Ω
220
.5
2Ω Rheo.
250 Ω
6KΩ Pot.
B+ 220
5VAC
B+ 90
4VAC
B- GND
B+ 45
S-M 440
OSC
350
111-A
#342
75 mmf
RFC
#275
2M
.0015
350
All Fil leads twisted.
SOVEREIGN A.C. Tubes(7);
(other types may be used).
(See Also the S-M Monograph.)

STANDARD 7-TUBE SUPER-HET WITH R-C AUDIO AMPLIFICATION

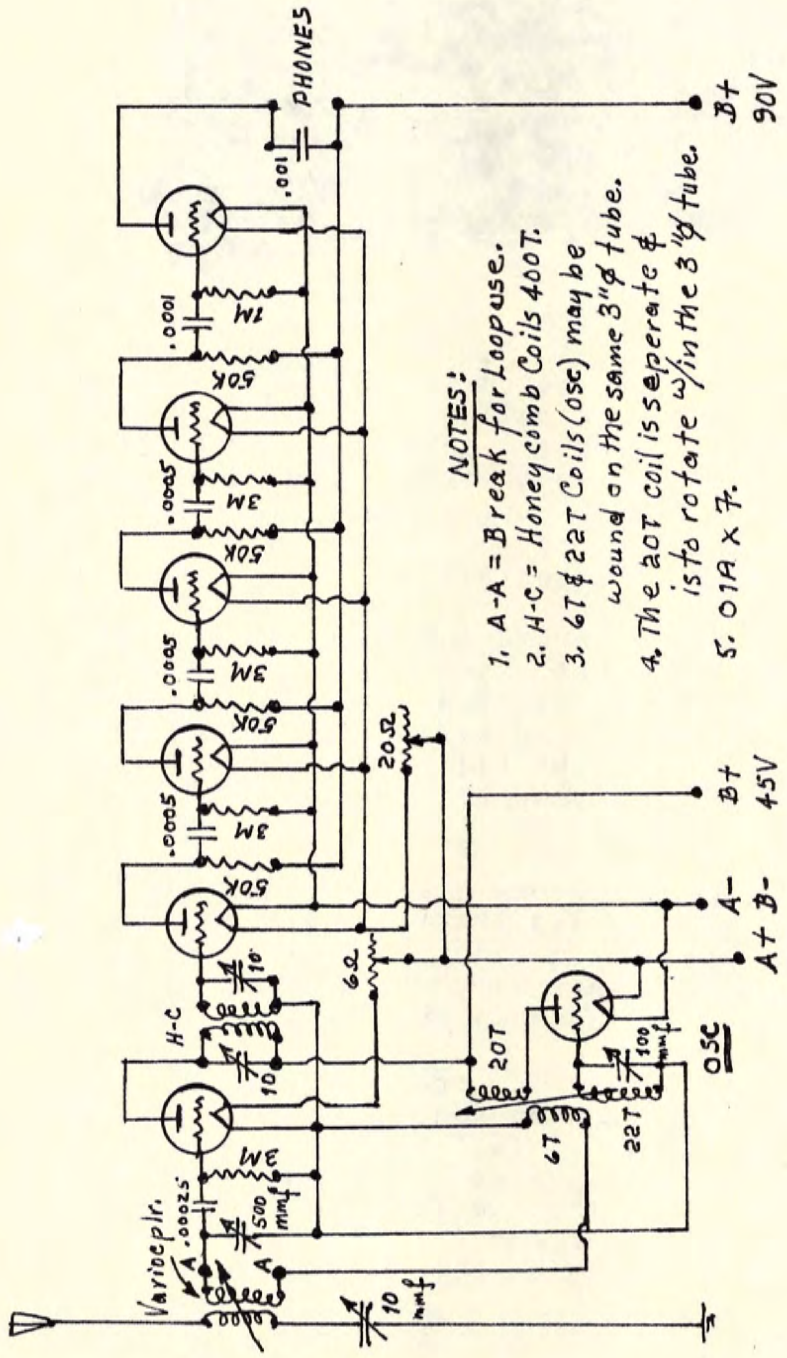

(1926)

THE THOMPSON SUPER SEVEN

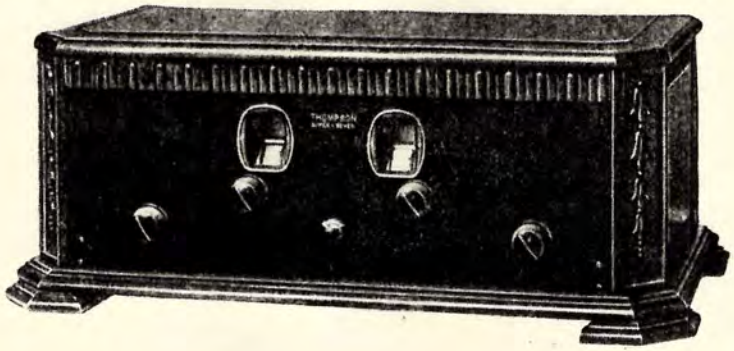

The Thompson Super Seven seems to have been a joint-effort between Thompson and Halldorson, in an effort to get into the super-het field. Until that time, Thompson had been the manufacturer of strictly Neutrodyne sets, of which the Model 81-R "Minuet" was the most elegant and imposing, at least in appearance and concept. The 81-R will be found detailed in Volume II-B, incidentally.

Halldorson was a manufacturer of transformers and their AR-56 all-electric set was not very successful. The Thompson Super Seven, like everyone else, used components of other manufacturers, including Camfield, Yaxley, S-M, and Ce-Co tubes. Their use of the Ellis "D"-coil oscillator was a novelty, not used by anyone else, and a sketch of it is included here.

Liberal use of C-battery bias (3V) applied to the grids of the first and second IF stages instead of using the conventional potentiometer was deemed more efficient. This was another of those never-really-resolved controversies so beloved by our early radio media editors.

Because the circuit is straight-forward, and easy to construct, if you have components and coils by others, provided the IF coils are of the same brand and matched, you will have no trouble in assembling the Thompson Super Seven super-het of 1927. The Camfield variables were among those competing with Remler and Cardwell, and were good enough to give the competition a reason to pause.

THOMPSON SUPER-SEVEN, 1927; Sht. 2

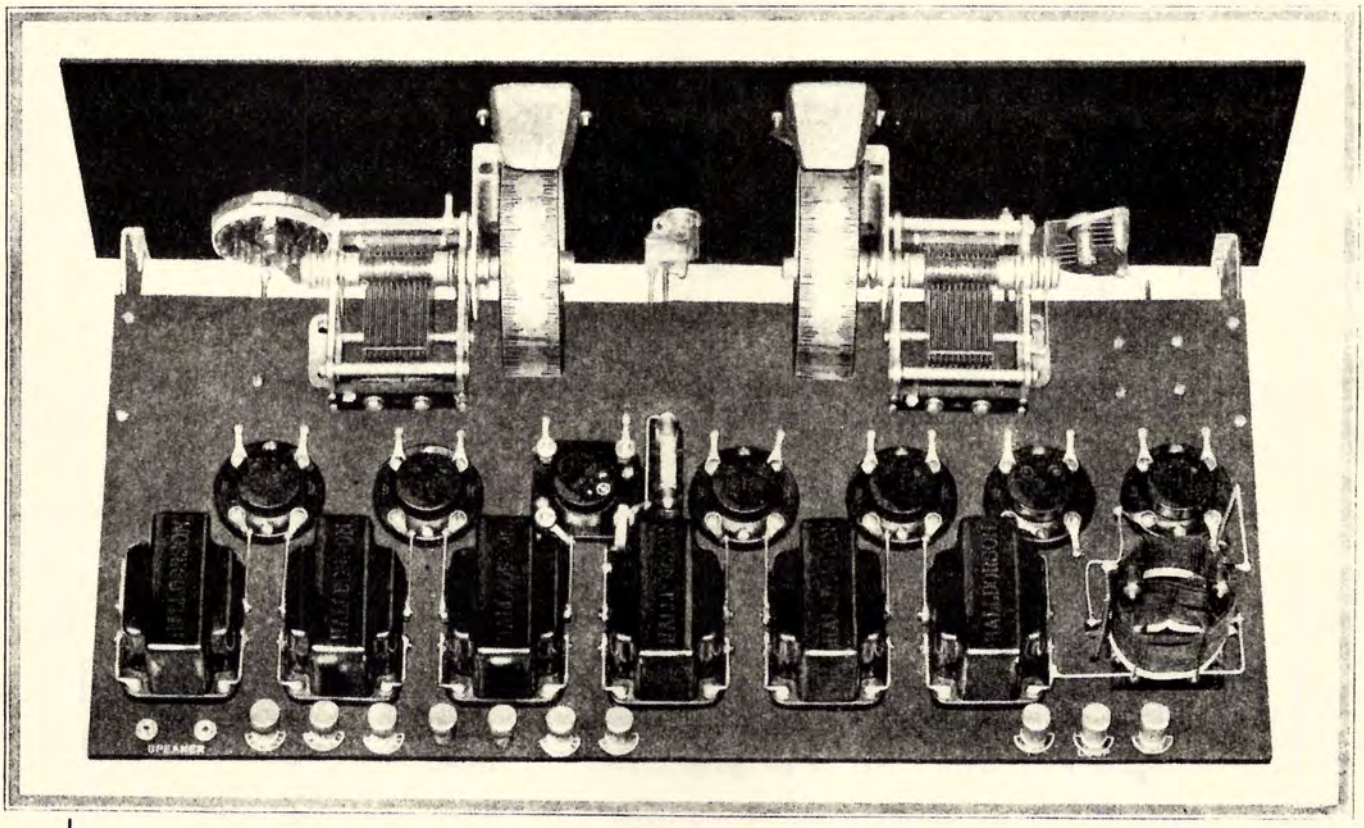

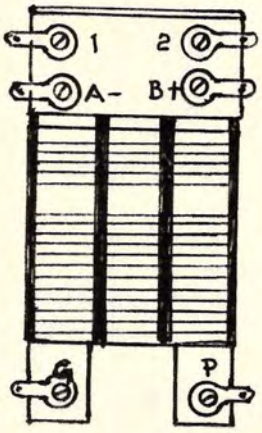

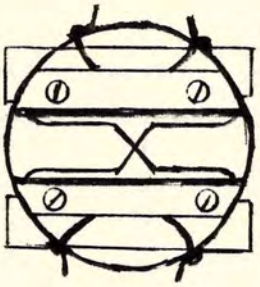

ELLIS "D"-COIL
OSCILLATOR

THOMPSON SUPER-SEVEN, 1927; Sht. 3

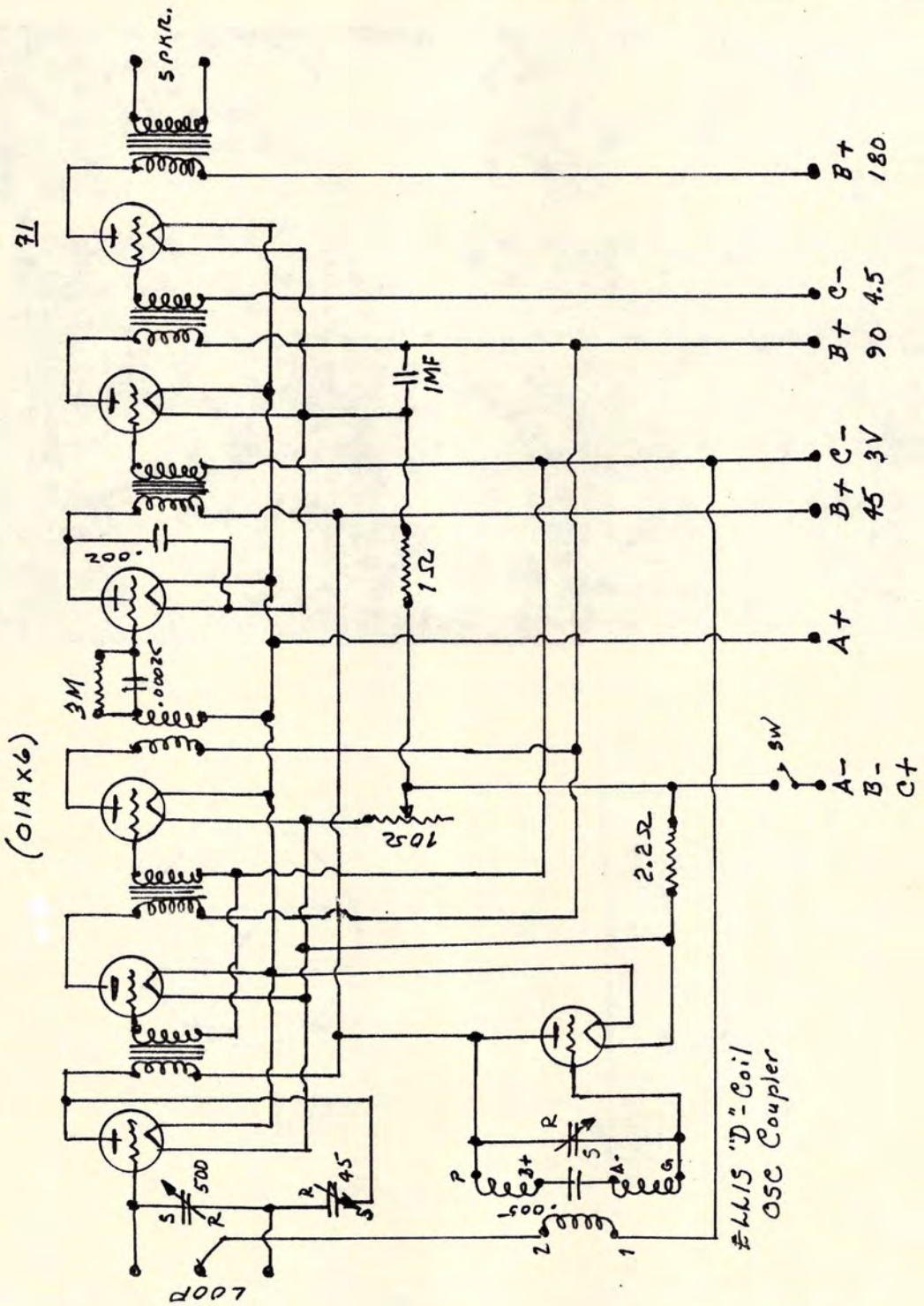

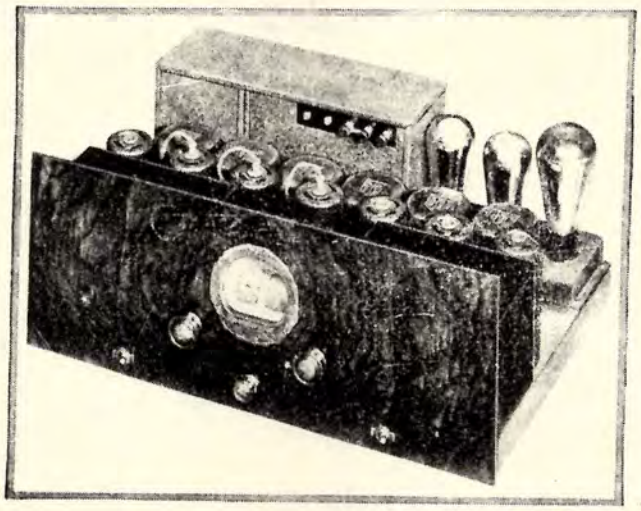

$199.50
LIST PRICE

Tyrman Imperial "80"

Custom-Bilt Shielded Grid

From the very beginning of Tyrman Electric of Chicago moving into the radio market, their products reflected thoughtful engineering and high-quality workmanship. While they never offered a factory-built set, they did offer the custom set-builder of the time factory-packaged parts which he could easily assemble.

The "Imperial 80" was Tyrman's most ambitious effort.

Offered as a semi-kit, the "80" boasted 10KC selectivity, plug-in short-wave coils beside the broadcast bands, non-oscillation, and a smooth antenna control. The Tyrman worm-drive illuminated drum-dial was better built than most, and the heavy steel sub-panel and wood-walnut impressed steel panel was impressive. It was also heavy. All components were encased in the deep brown wrinkle finish that was the hall-mark of Tyrman units.

Prior to the "80", Tyrman had offered the "70" and the "60", both of which were pioneering efforts with the then-new screen-grid tubes; they sold for $100 and $70, respectively, still as semi-kits. While you may never find a completed Tyrman receiver at a swap-meet, you will find Tyrman components now and then. Why not start collecting them, with an eye to constructing a Tyrman screen-grid receiver? - it will be worth it.

TYRMAN "IMPERIAL 80" SUPER-HET; Sht. 2

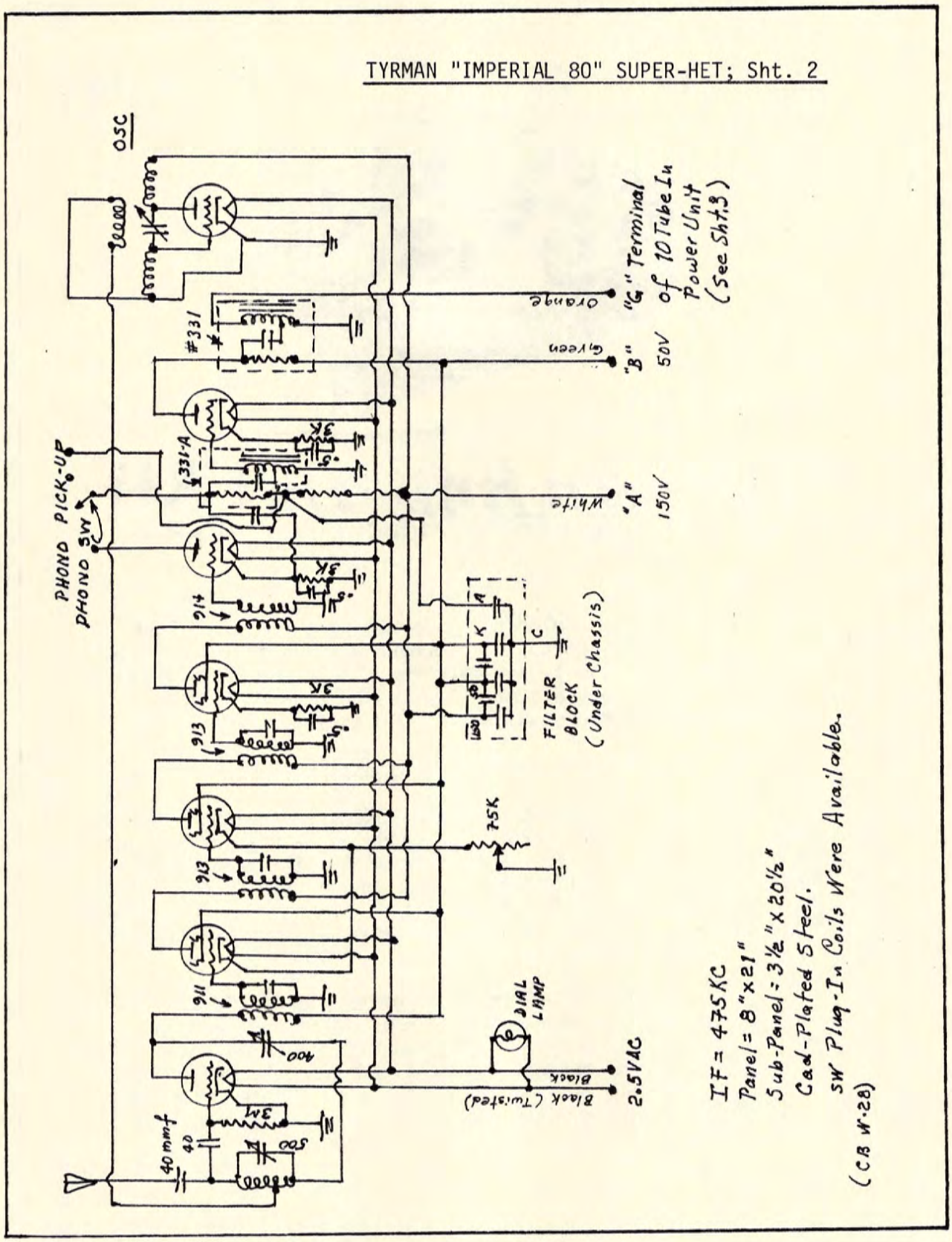

TYRMAN "IMPERIAL 80" SUPER-HET: Sht. 3

Rear view of the Tyrman Double Drum Dial ready to mount.

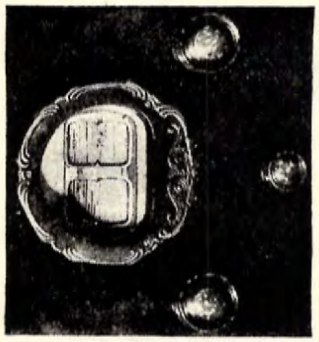

Tyrman Illuminated Worm Drive Double Drum

Tyrman Shielded Socket Automatically Grounded

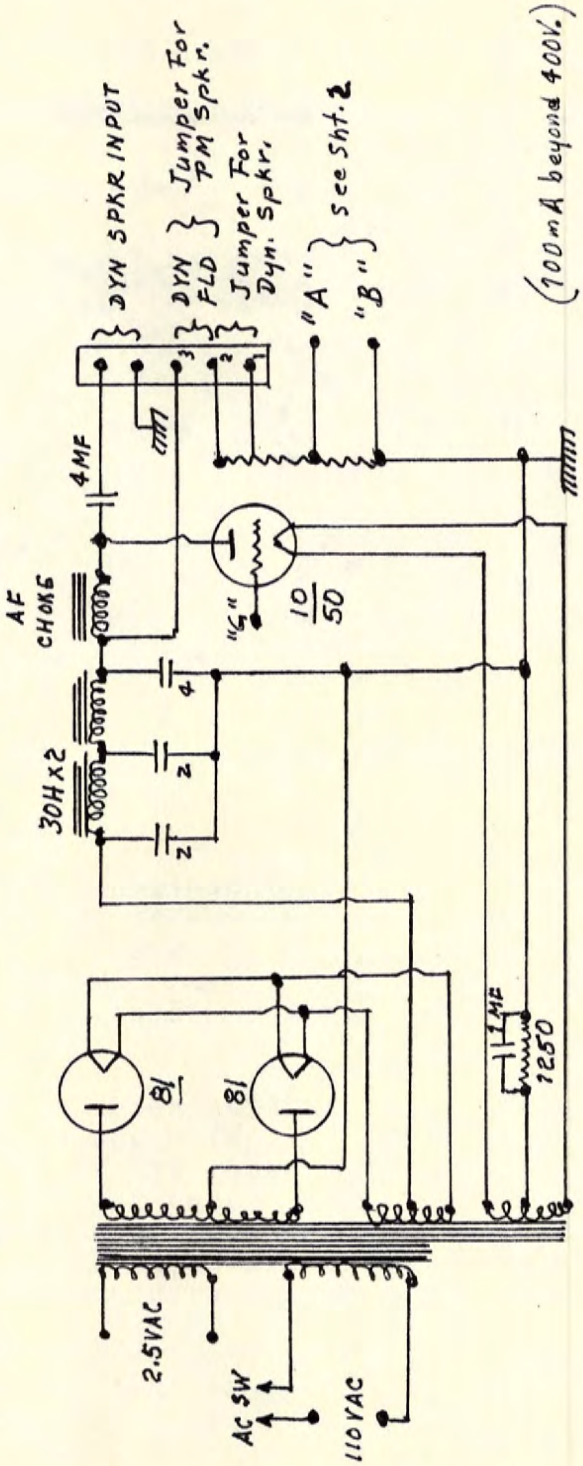

Victoreen Universal Receiver

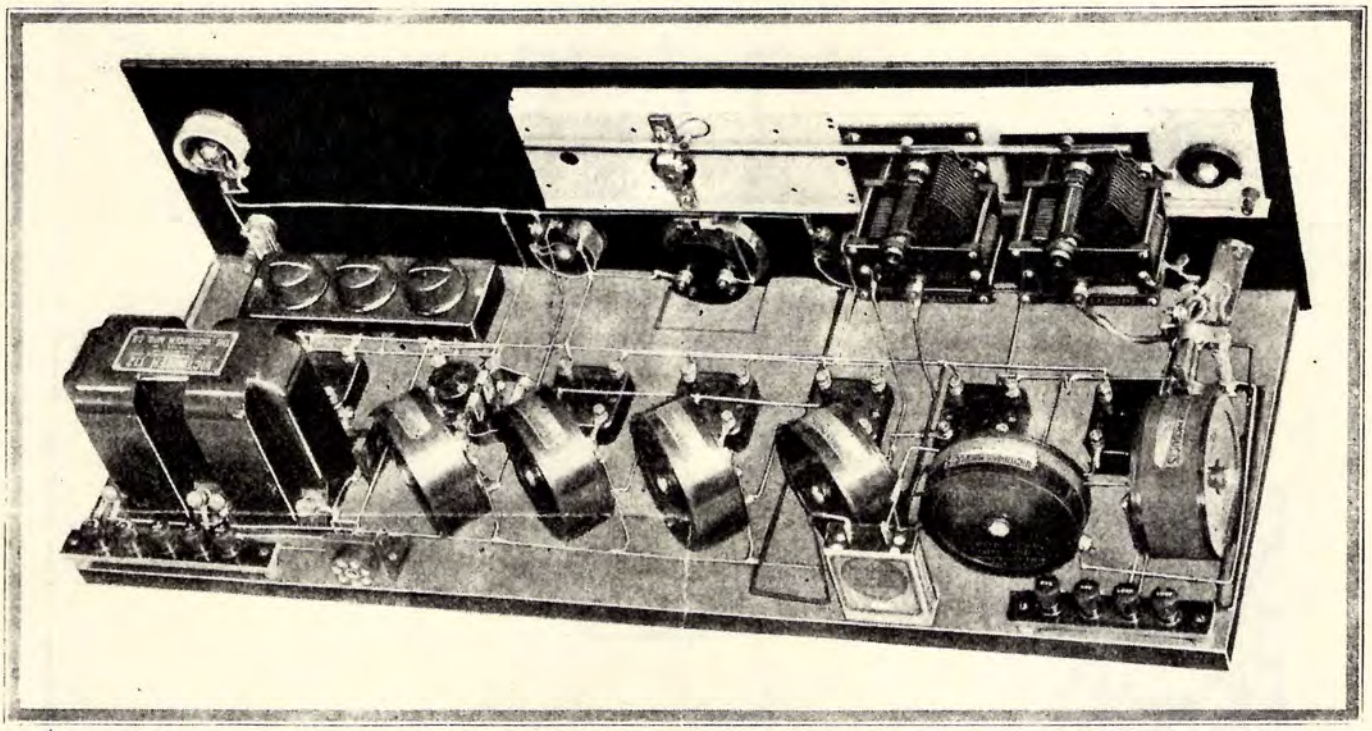

There is little disagreement among old time hobbyists that of all the kitted super-hets of the late Twenties, the several offerings by Geo. W. Walker of the "Victoreen" were the most popular and efficient. Their virtues lay in the coils designed by John Victoreen, details of whom you will find in Volume I.

The receiver selected here may be considered to be symptomatic of the whole, although a seperate Monograph on all of the "Victoreen" receivers is available. The ganging of the variable condensers and the encasing of the audio frequency sexion, along with its controls, made for a neat assembly, as the cut above demonstrates, but the original circuits worked quite well without them.

The "Victoreen" coils, incidentally, could easily be used in most any other circuit of like-configuration. One of my favourite early super-hets.....

VICTOREEN UNIVERSAL SUPER-HET, 1927; Sht. 2

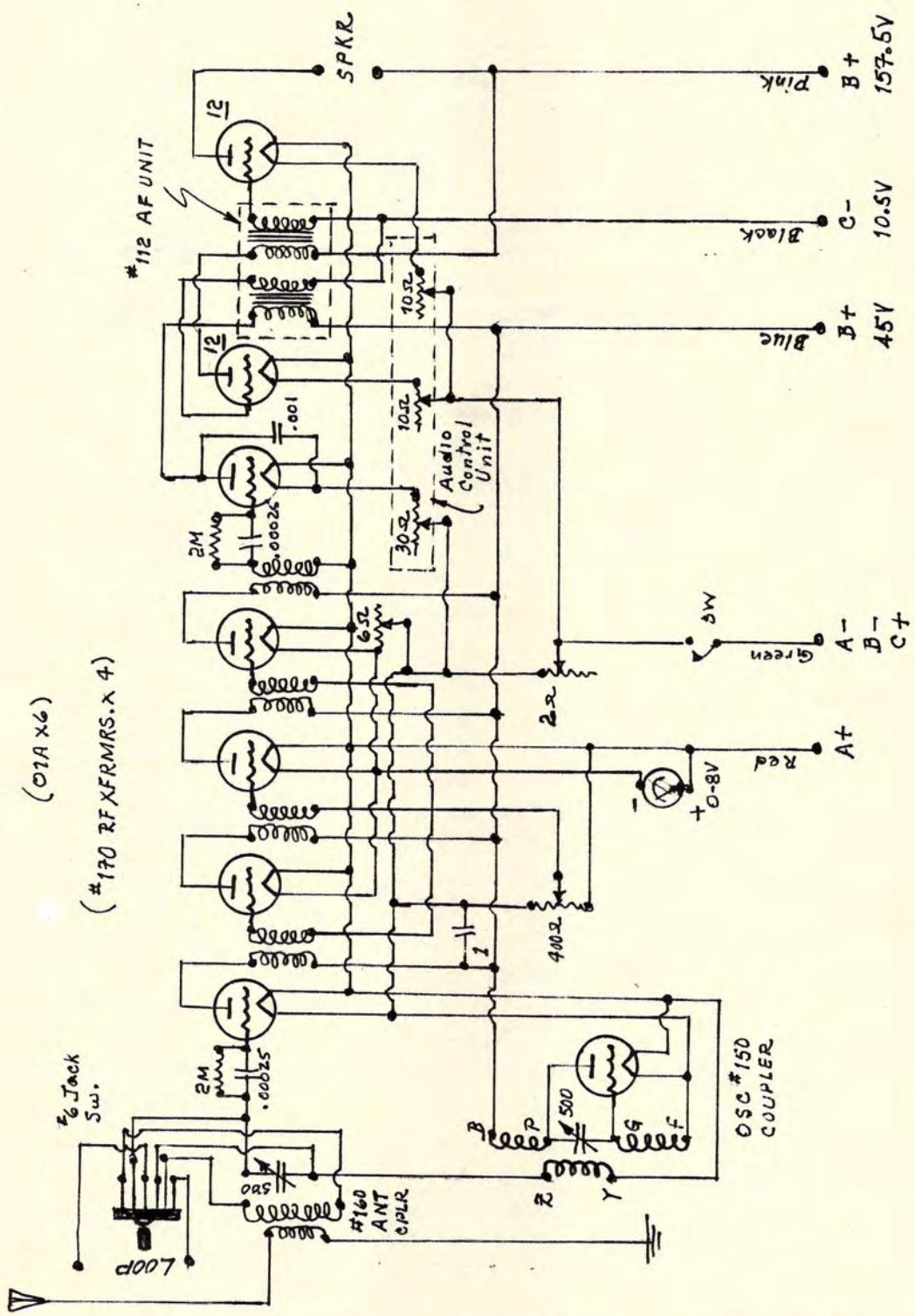

VICTOREEN UNIVERSAL SUPER-HET, 1927; Sht. 3

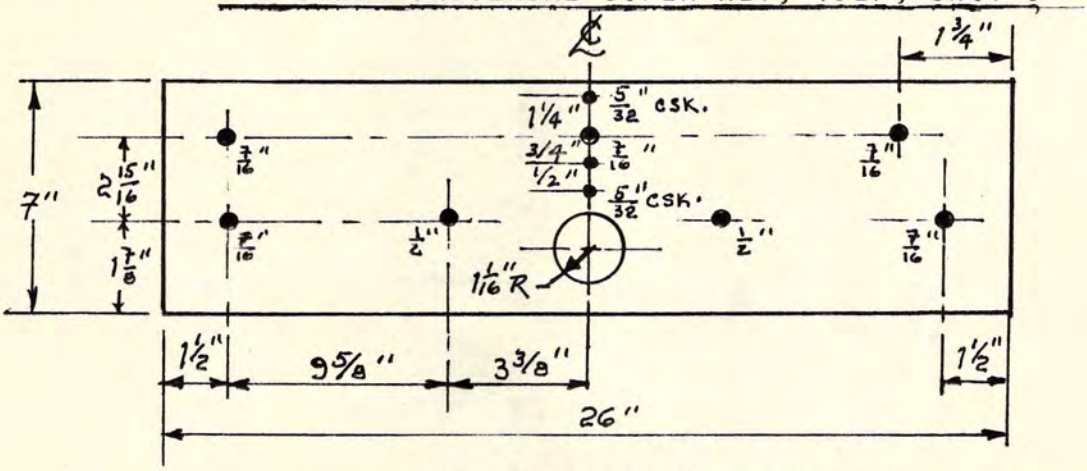

PANEL DRILLING TEMPLATE

MAJOR PARTS LIST

VICTOREEN Master Control Unit.
- Audio Control Unit, # 112.
- Oscillator Coupler # 150.
- Antenna Coupler # 160.
- I.F. Transformers (4) # 170
- 400 Ω Potentiometer.
- 6.6 Ω Rheostat.
- 2.2 Ω Rheostat.

MAR-CO # 192 Vernier Dial, 4" ϕ.
JEWELL # 135 Voltmeter.
FROST # 530 Sockets (7).
BENJAMIN # 9040 Socket.
YAXLEY # 10 & # 60 Switches, 1 Each.
EBY Binding Posts, Engraved (9).
Ce-Co "A" Tubes (6).
Ce-Co "F" Tubes (2).
ELECTRAD Fixed Condensers & Grid Leaks.

Panel = LIGNOLE 7" x 26" x 3/16".
Baseboard = Wood, 9½" x 25½" x ½".
Terminal Strips = 5" x 5/18" x 3/16".
(FORMICA) 4" x 5/8" x 3/16".

(CB 11·27)

LACAULT's "ULTRADYNE L-2" SUPER-HET, 1925; Sht.1

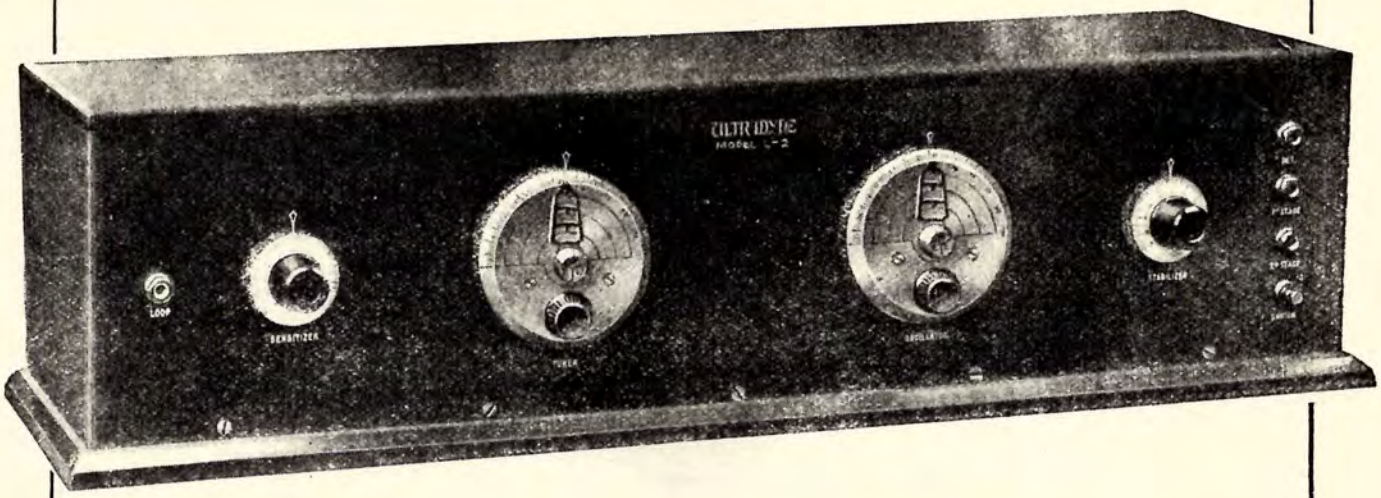

Readers of my Sketch-Books and Monographs learned early on that of all the early radio pioneers, Robt. E. Lacault has always been my favourite.

After he left the French team involved with the design of Armstrong's super-het, he came to the States and went to work for Gernsback, as the Senior Editor - much to the dismay of Arthur Lynch, who resigned shortly thereafter.

When Lacault left Gernsback, he designed the first of his four "Ultradynes", and set-up Phenix Radio Company, which later became R.E.L., which later became Radio Electrical Labs - using his initials for the "bug".

The "Ultradyne L-1" was a six-tube super-het that presented for the first time the modulator concept of reception, in which the plate of the first RF tube received no B+ voltage. It created quite a stir, and the circuit, itself, was remarkable in that it could operate without aerial or ground, without an audio sexion, and still drive a conventional cone speaker. Its sensitivity was phenomenal, although it must be admitted that its selectivity was wanting.

The "Ultradyne L-2" was a superior circuit, and that one has been chosen to exemplify Lacault's contributions. The coils designed by Lacault, called "Ultra-formers" can be used with any other super-het circuit with an IF of 35 to 60 KC. They were only superceded by the coils designed by John Victoreen a few years later.

A seperate Monograph on all of Lacault's "Ultradynes" and "Strobodynes" is available from the publishers.

LACAULT's "ULTRADYNE L-2" SUPER-HET, 1925; Sht.2

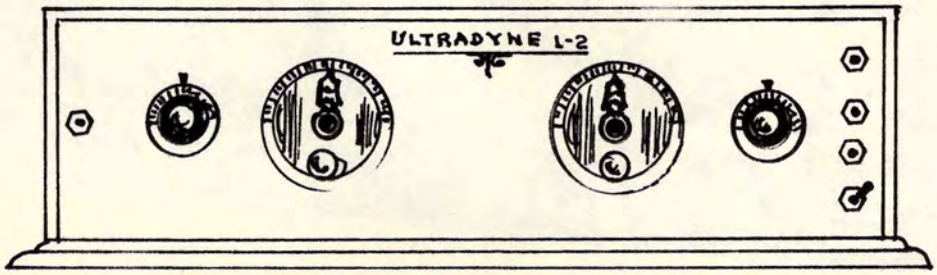

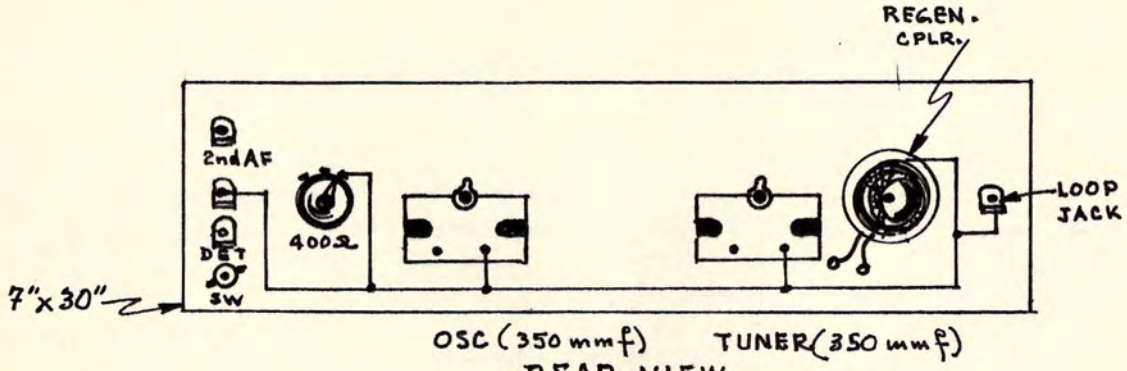

REAR VIEW

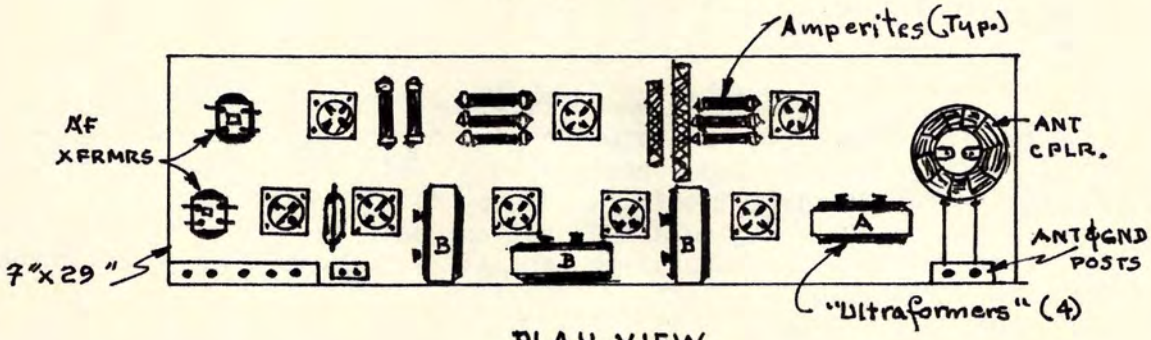

PLAN VIEW

(RNE-14/RW 7-10-26)

LACAULT's "ULTRADYNE L-2" SCHEMATIC, 1925

L-2 COMPONENT CLARIFICATION SKETCHES

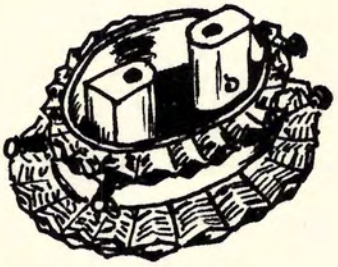

ANT. CPLR.

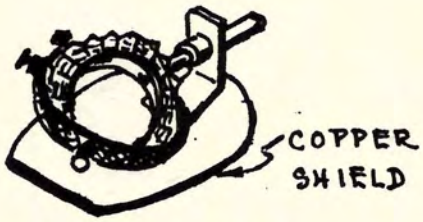

REGEN. CPLR.

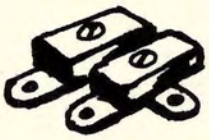

FIXED COND.
Used w/ Ultraformers
(8 Req.)
.00025 mmf

OSC. CPLR.

(Brown
Bakelite
Casing)

(4) ULTRAFORMERS

LACAULT's "ULTRADYNE L-2" SUPER-HET, 1925; Sht. 4

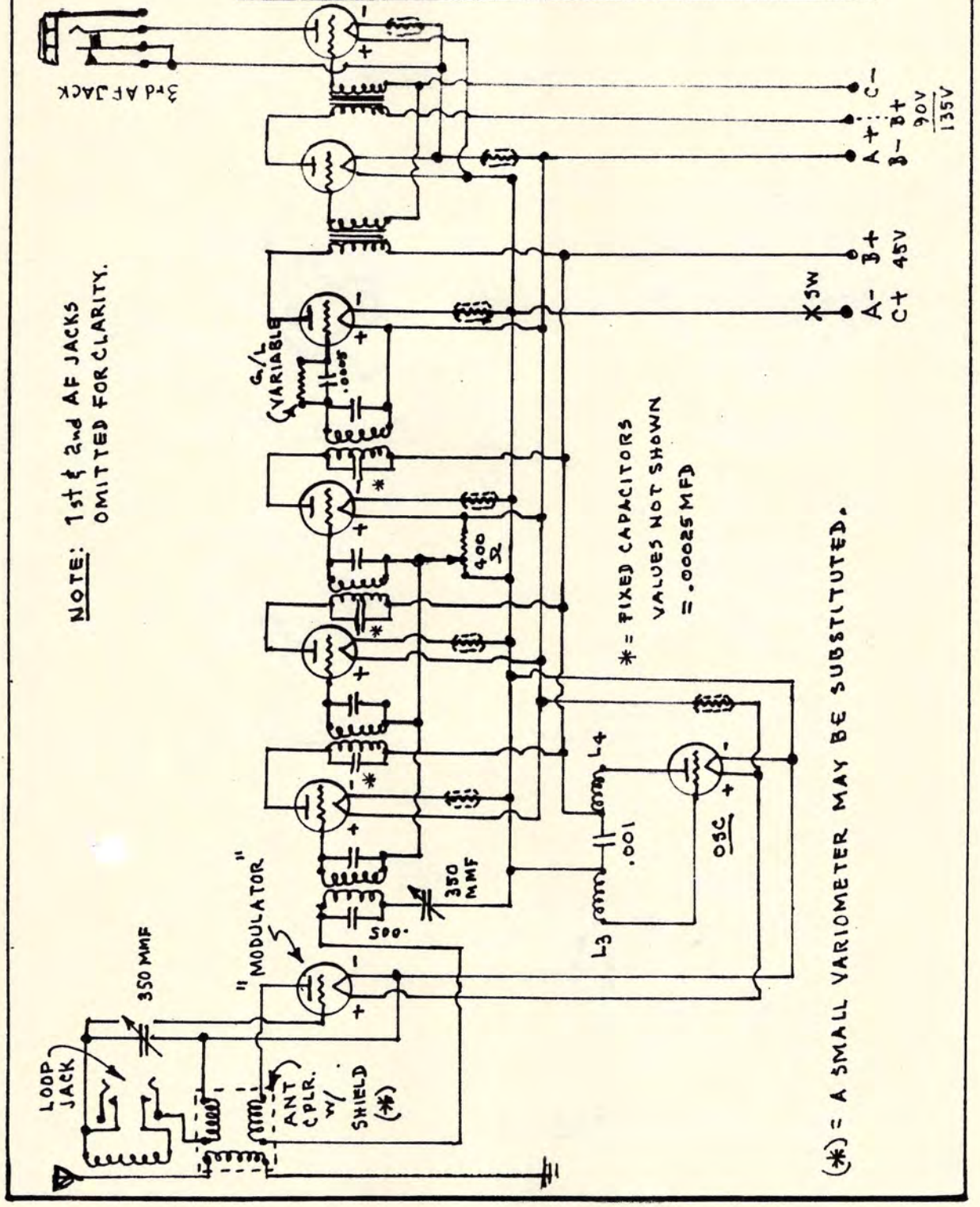

LACAULT's "ULTRADYNE L-2" SUPER-HET, 1925; Sht. 5

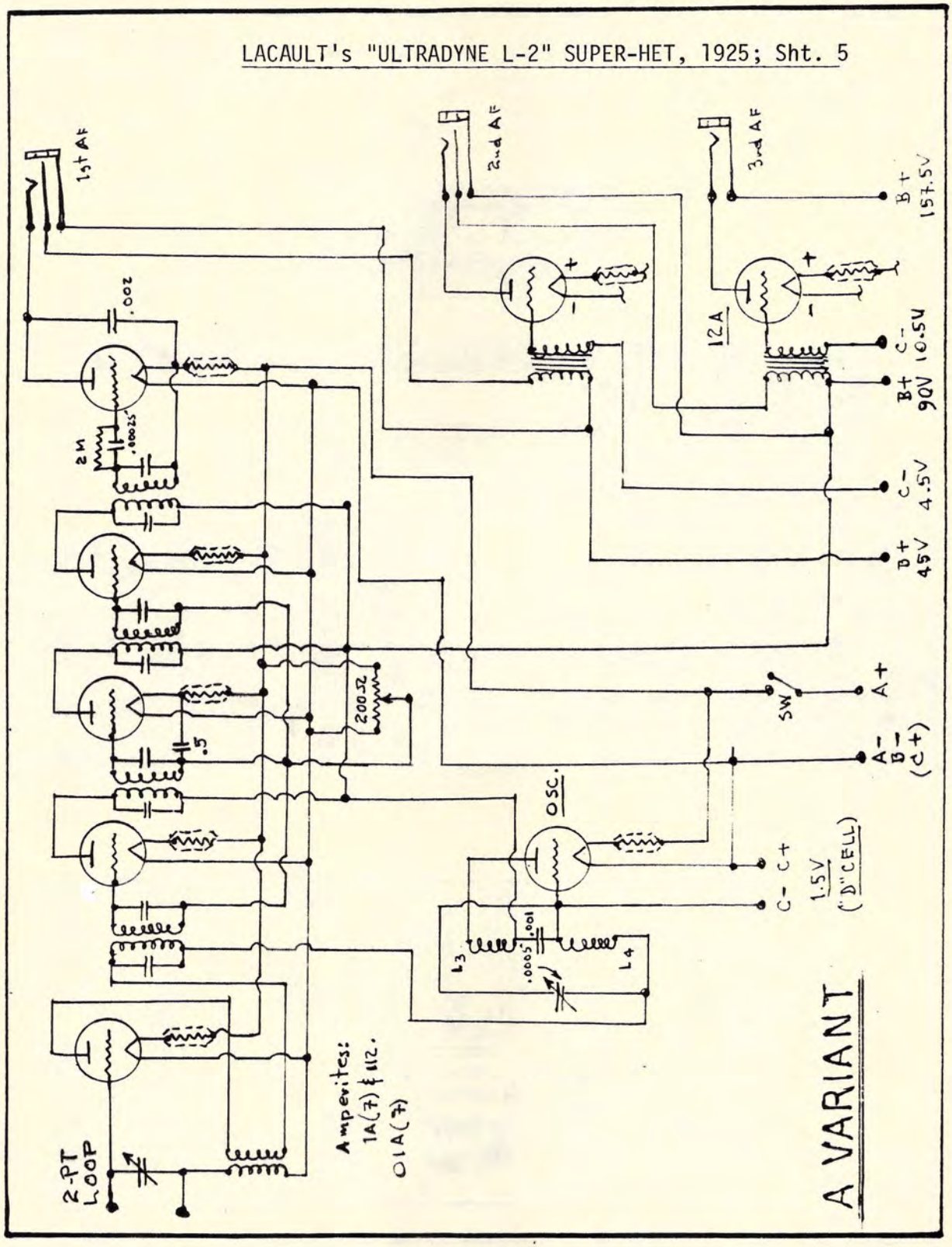

LACAULT's "STROBODYNE" SUPER-HET, 1927; Sht. 1

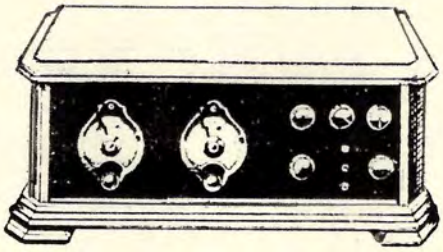

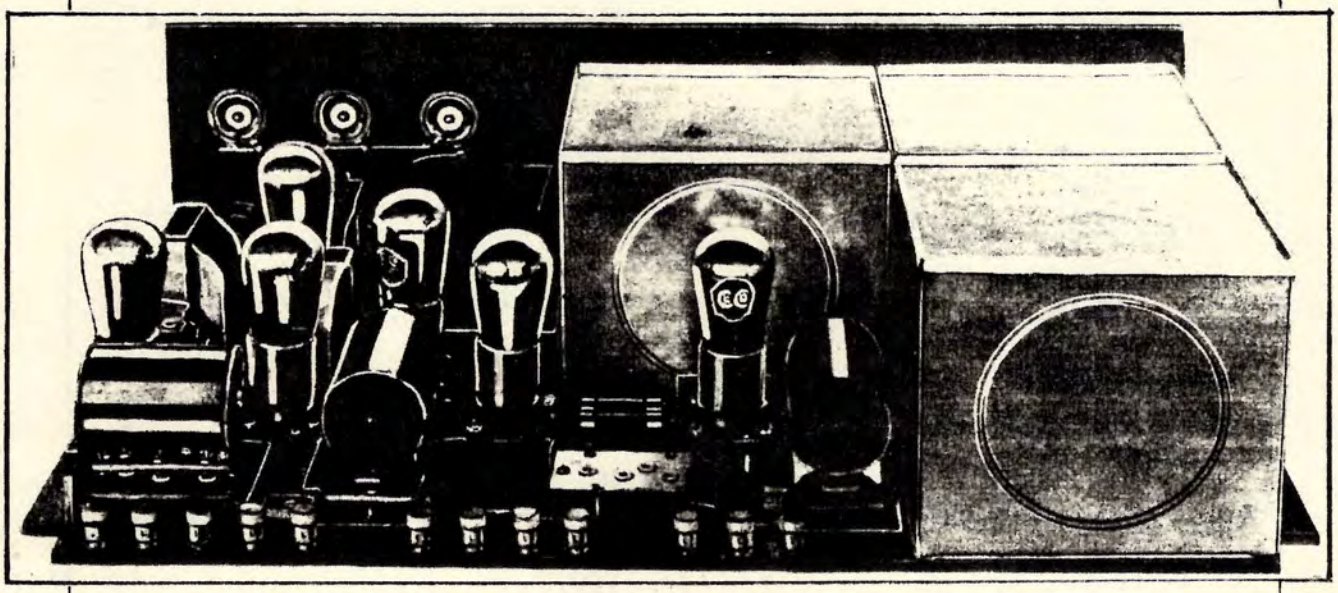

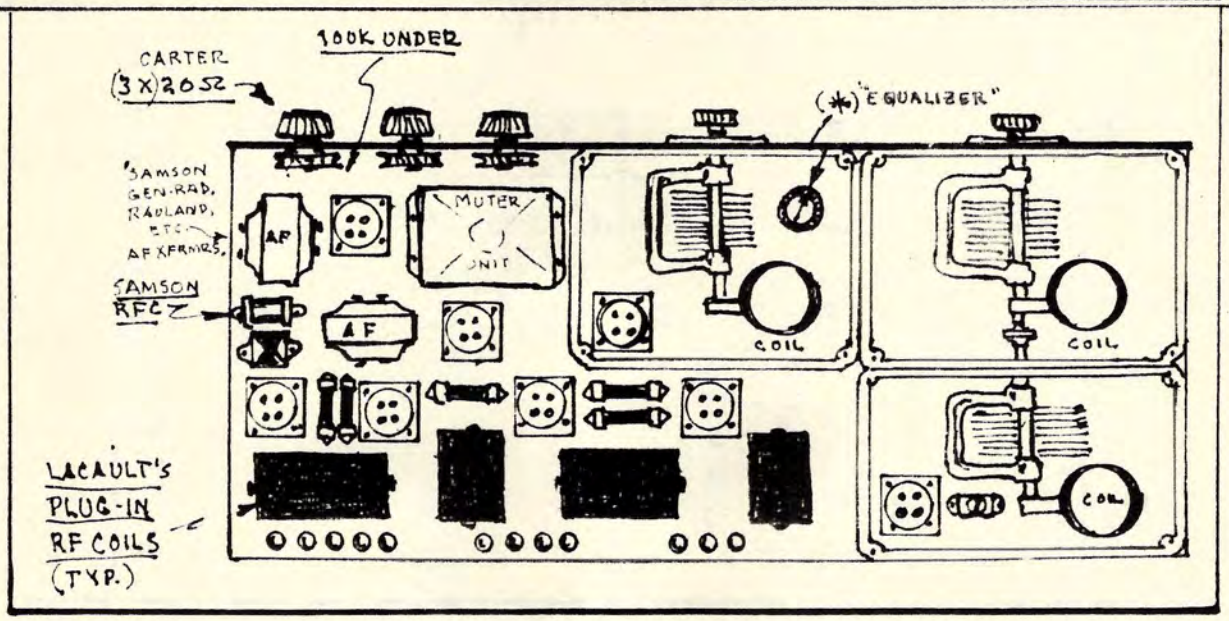

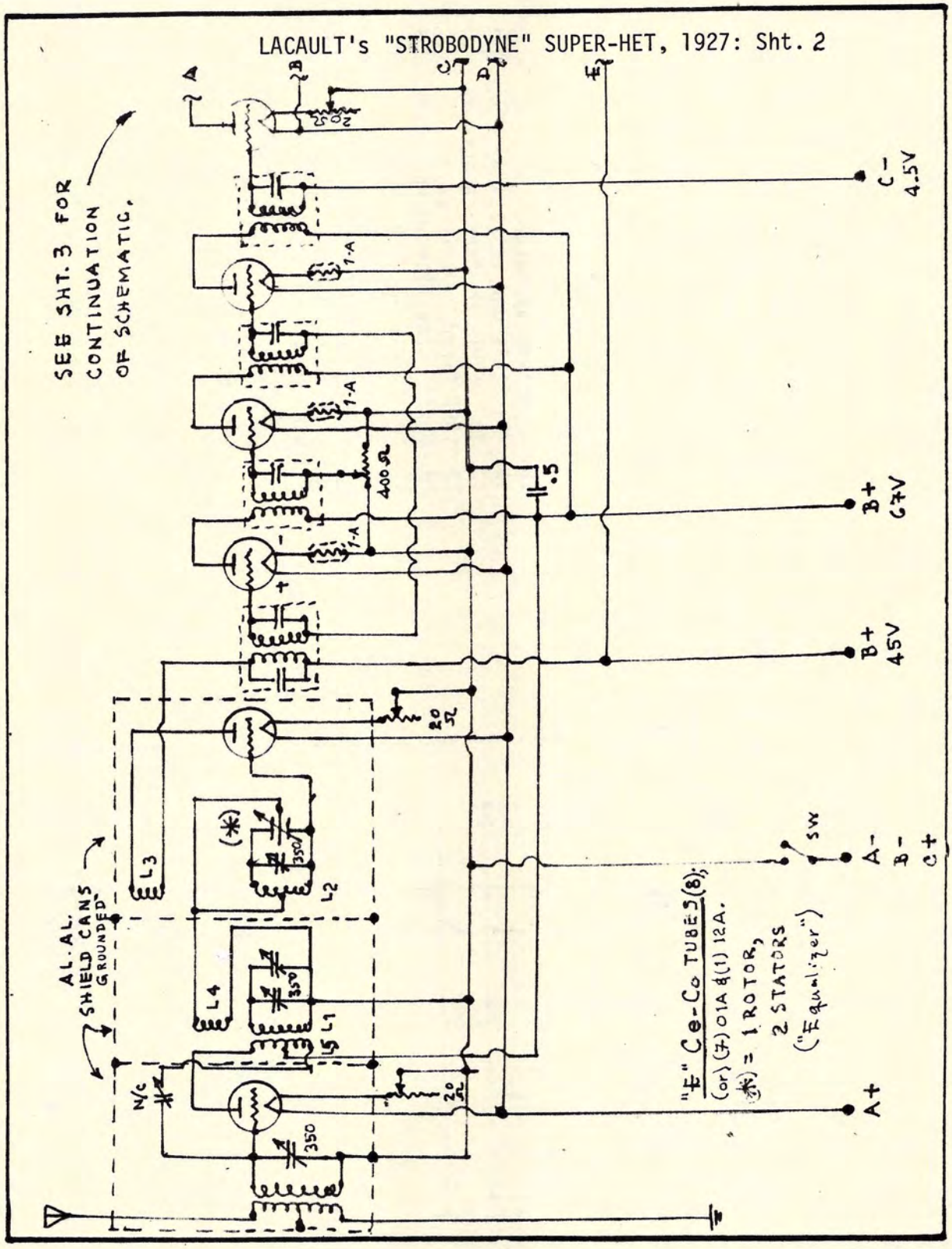
LACAULT's "STROBODYNE" SUPER-HET, 1927: Sht. 2
SEE SHT. 3 FOR CONTINUATION OF SCHEMATIC.
AL. AL. SHIELD CANS GROUNDED
"E" Co-Co TUBES (8); (or) (7) 01A & (1) 12A.
(*) = 1 ROTOR, 2 STATORS ("Equalizer")
C- 4.5V
B+ 67V
B+ 45V
A+
A-
B-
C+
SW
400 Ω
20 Ω
.5
350
N/C
L1
L2
L3
L4
L5
1-A

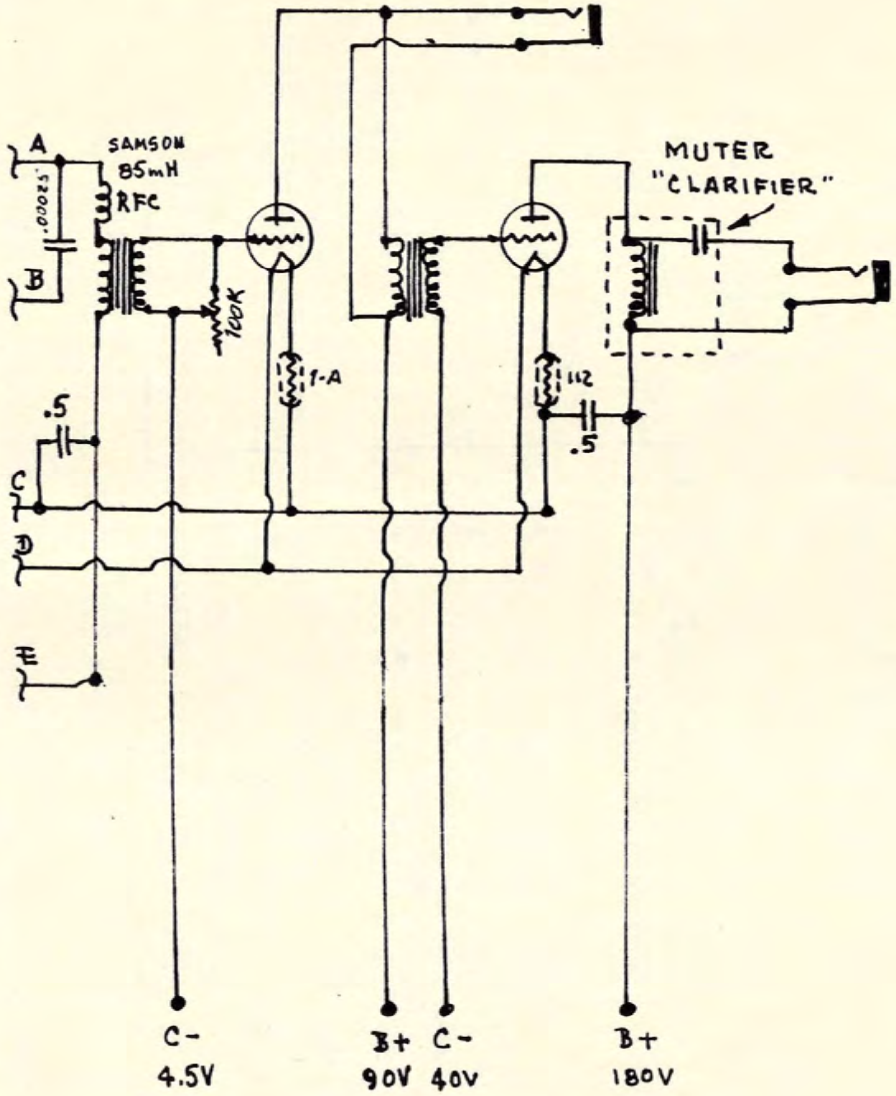

NOTES:

1. Ce-Co Tubes used throughout.("E")
2. 350 MMF Variables = Hammarlund.
3. Carter Jacks & Rheostats.
4. AF Xfrmrs. = GEN-RAD 285-D/285-L.
5. L1, L4, L5 = one special Hammarlund Auto-Coupler coil/.
6. L2, L3 = one regular Hammarlund Auto-Coupler coil.
7. Panel = 8" x 24" x 3/16".
8. Sub-Panel = 12" x 25" x ¼"; Micarta used originally.
9. 12 Binding posts.
10. Amperites as noted.
11. (7) 01A's and (1) 12A or 71A.
12. (3) .5 MFD By-Pass capacitors.
13. .002 fixed capacitor.
14. Muter "Clarifier" Output unit.
15. (3) Shield boxes as noted.
16. (4) Lacault Plug-In Coils.
17. Special variable condenser, used as a compensating condenser: 1 plate; 2 stators. (This variable can be made by the constructor from a "butterfly" condenser.)

LACAULT's "STROBODYNE" SUPER-HET, 1927; Sht. 3

STROBODYNE "JUNIOR" SUPER-HET. 1929; Sht.1

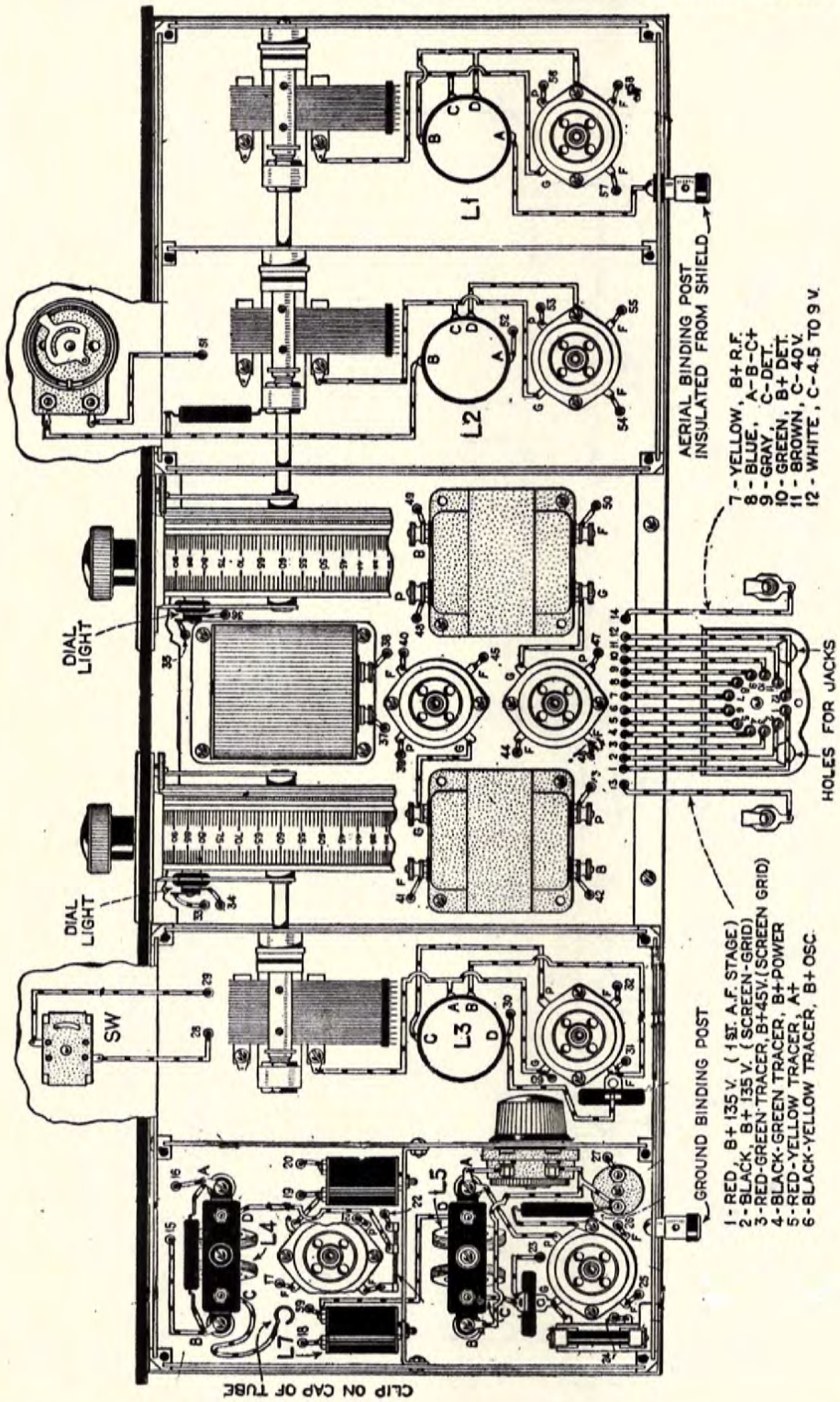

STROBODYNE "JUNIOR" SUPER-HET, 1929; Sht. 2

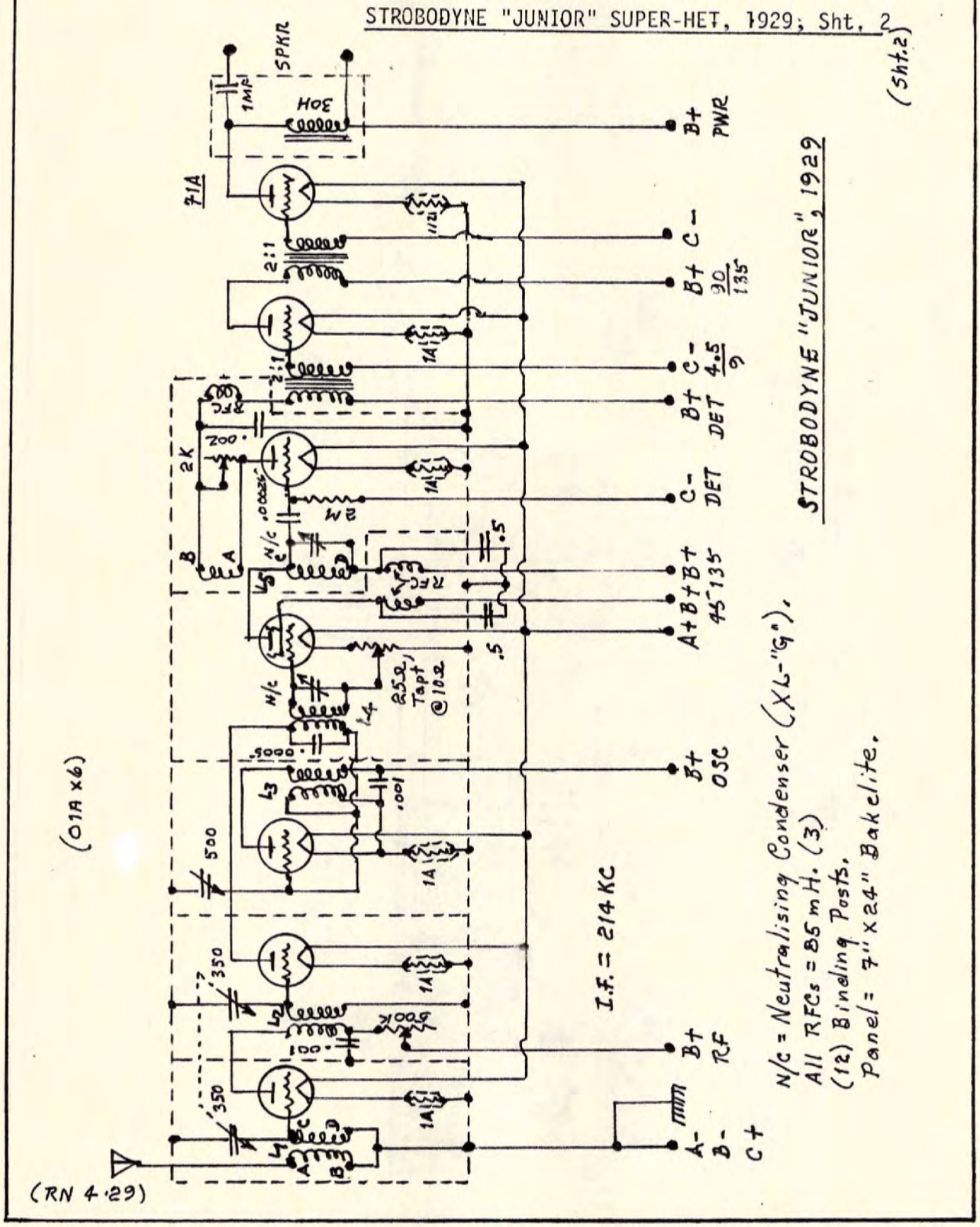

STROBODYNE "JUNIOR" SUPER-HET, 1929; Sht. 3

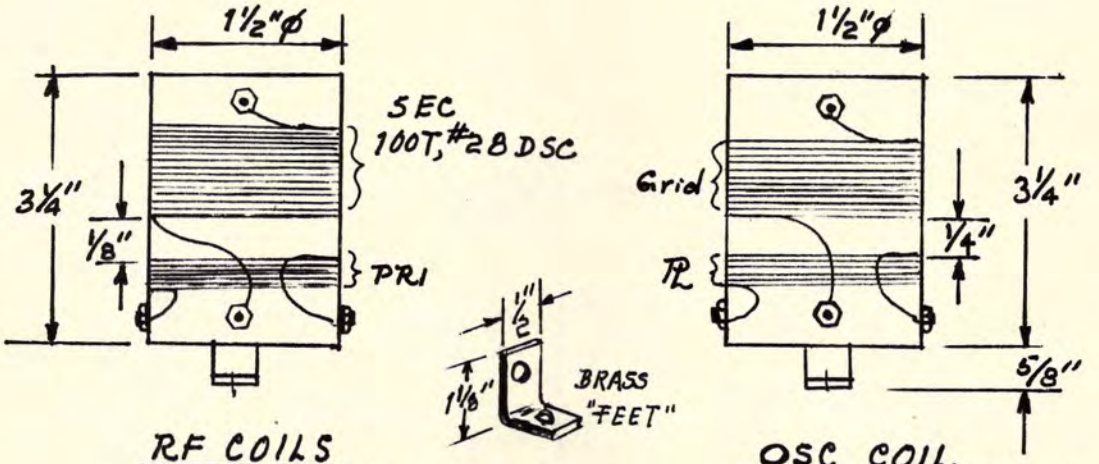

RF COILS
L_1 = 20T, #28DSC. (PRI)
L_2 = 30T, #32 DSC. (PRI)

OSC COIL
Grid = 48T, #28 DSC.
Plate = 35T, #28DSC.

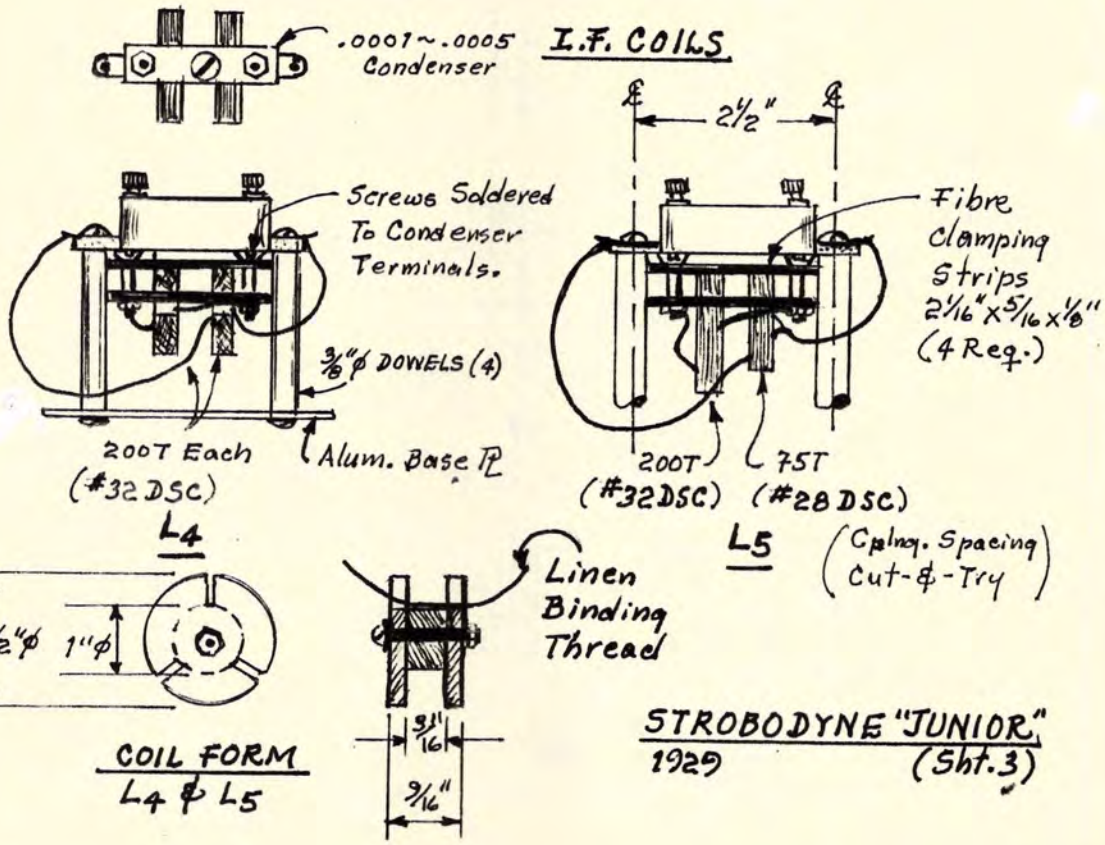

22 KC SHORT WAVE SUPER-HET, 1927; Sht. 1

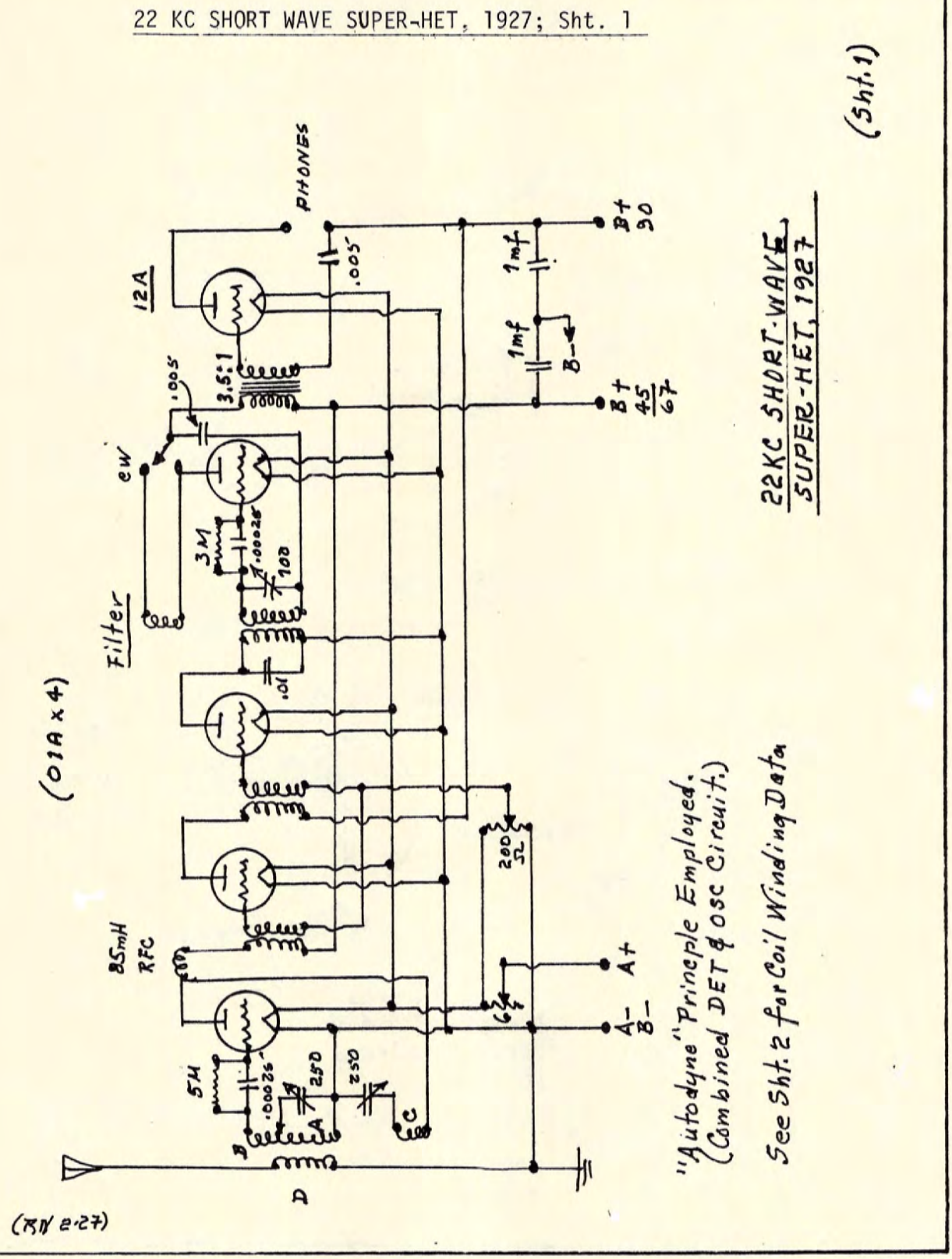

22 KC SHORT-WAVE SUPER-HET, 1927; Sht. 2

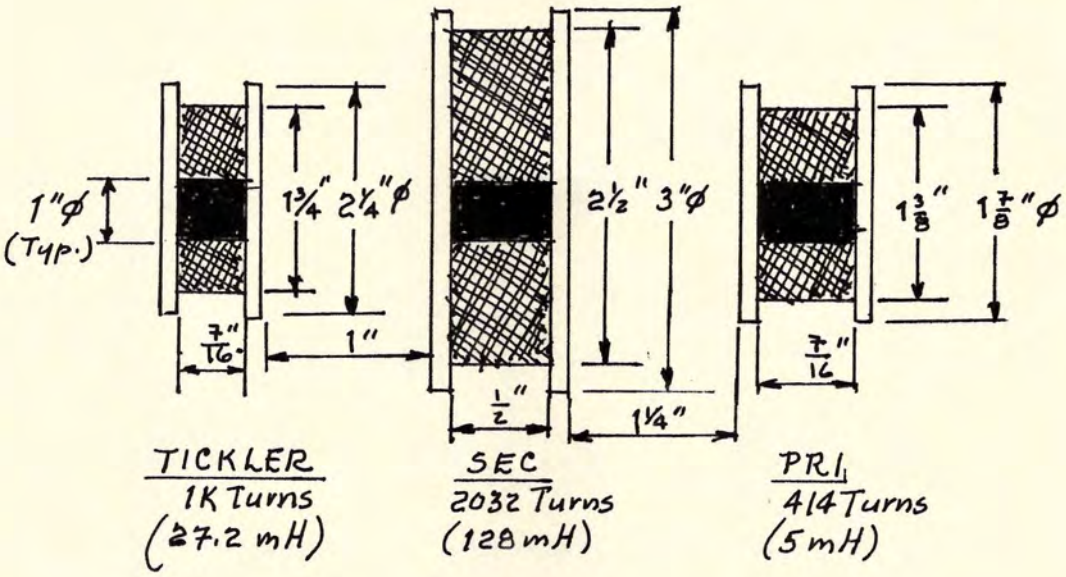

FILTER XFRMR. COIL DETAILS

(#16 Bare Copper Wire.)

METERS:	A	B	C	D
40	4	13	3	6
50	6	28	4	6
80	8	28	4	8

Coil Form = 3"ϕ, Air-wound.
(General Radio's 271 IF coils may be used, having an I.F. of 22KC.)

NOTES

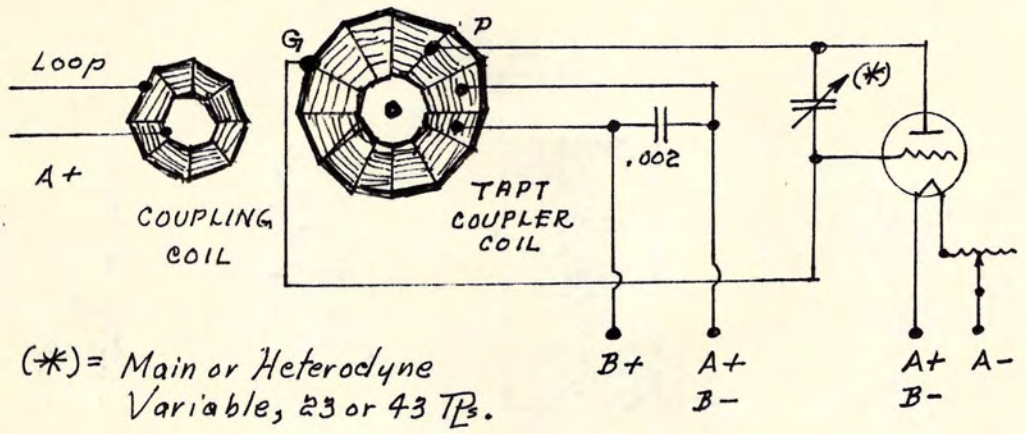

(*) = Main or Heterodyne Variable, 23 or 43 TPs.

EARLY OSCILLATOR CONCEPT....

used for designing super-hets. Spider-web coil shown, but the principle applies to other types of coils.

Beyond Rider!

The author and the publishers take pleasure in announcing that Howard W. Granoff has been selected as the exclusive distributor for United States sales of these unique Sketch-Books and Monographs, and other related writings of the author - D.H.MOORE.

Comments and suggestions from readers of these dedicated works are always welcome, and will be given an immediate hearing, with an eye to improving future editions. While these unique Sketch-Books and Monographs are the labour of one man, the vintage radio hobby remains, as with any legitimate hobby, a shared enthusiasm. These works, then, are a sharing of one man's affection for vintage radio.

Olde Tyme Radio Co.

2445 LYTTONSVILLE RD.

SILVER SPRING, MD.-20910

(301) 585-8776

OTHER PUBLICATIONS AVAILABLE

THE VINTAGE RADIO IDENTIFICATION SKETCH-BOOKS of D.H.MOORE:

Vol. I - Introductory Essays
Vol. IIA - Broadcast Receivers, A-L
Vol. IIB - Broadcast Receivers, M-Z
Vol. III - Short-Wave Receivers
Vol. IV - Power Supplies & Amplifiers
Vol. V - Hardware & Accessories
Vol. VI - Early Test Equipment
Vol. VII - General Technical Data
Vol.VIII - The Early Years: 1910-1925
~~*Vol. IX - Supplemental Data*~~

SEPERATE MONOGRAPHS:

PILOT	*VICTOREEN*	*ULTRADYNE*
REMLER/BEST	*STROBODYNE*	*BROWNING-DRAKE*
SCOTT (Early)	*BREMER-TULLY*	*NATIONAL/HAMMARLUND*
INFRADYNE	*DOERLE*	*SARGENT-RAYMENT*
	THE MYSTERIOUS REFLEX	*SILVER-MARSHALL*

Other Monographs are in preparation, and will be announced as published.

COPIES OF ORIGINAL CONSTRUCTION BLUE-PRINTS:

ULTRADYNE L-2	VICTOREEN "Standard"
TROPODYNE	VICTOREEN "Universal"
COUNTERPHASE 4	BEST 115 KC
COUNTERPHASE 6	PERIFLEX
BROWNING-DRAKE	HAMMARLUND-ROBERTS
SARGENT 8-34	CONSRAD PORTABLE, etc.

The Editorial Group, Ltd.

D. H. MOORE, A.D.I
DIRECTOR

"Specialists In Technical Documentations"

P.O. BOX 521
PALO ALTO, CALIF.
94302